Investigative Physics
Module 2: Activity Units for Physics 132

Emory F. Bunn,[1] Mirela Fetea,[1] Gerard P. Gilfoyle,[1] Henry Nebel,[1]
Philip D. Rubin,[2] and Michael F. Vineyard[3]

[1]Department of Physics, University of Richmond, VA

[2]Department of Physics, George Mason University, Fairfax, VA

[3]Department of Physics, Union College, Schenectady, NY

December 19, 2008

Abstract

The exercises in this manual have been developed to support an investigative physics course that emphasizes active learning. Some of these units have been taken from the Workshop Physics project at Dickinson College and the Tools for Scientific Thinking project at Tufts University and modified for use at the University of Richmond. Others have been developed locally.

The units are made up of activities designed to guide your investigations in the laboratory. The written work will consist primarily of documenting your class activities by filling in the entries in the spaces provided in the units. The entries consist of observations, derivations, calculations, and answers to questions. Although you may use the same data and graphs as your partner(s) and discuss concepts with your classmates, all entries should reflect your own understanding of the concepts and the meaning of the data and graphs you are presenting. Thus, each entry should be written in your own words. Indeed, it is very important to your success in this course that your entries reflect a sound understanding of the phenomena you are observing and analyzing.

We wish to acknowledge the support we have received for this project from the University of Richmond and the Instrumentation and Laboratory Improvement program of the National Science Foundation. Also, we would like to thank our laboratory directors for their invaluable technical assistance.

Contents

1 Heat, Temperature, and Internal Energy **4**

2 Calorimetry **6**

3 Heat of Vaporization of Nitrogen **11**

4 Boyle's Law **13**

5 Charles' Law **17**

6 The P-T Relationship of a Gas **20**

7 Kinetic Theory of Ideal Gases **22**

8 Applying the Kinetic Theory **27**

9 Einstein Solid **32**

10 Entropy and Temperature **41**

11 Music to Our Ears: Standing Waves in Strings **48**

12 Resonance in Tubes **54**

13 Electrostatics **56**

14 The Electrical and Gravitational Forces **60**

15 Electric Fields and Equipotential Lines **65**

16 The Electric Potential **68**

17 The Electric Field and the Electric Potential I **75**

18 The Electric Field and the Electric Potential II **80**

19 The Electric Field and the Electric Potential III **83**

20 The Electric Field and the Electric Potential IV **86**

21 The Electric Field of the Atomic Nucleus **89**

22 The Charge Distribution of the H_2O Molecule **92**

23 Ohm's Law **96**

24 Kirchhoff's Rules **101**

25 Capacitance Series Circuit **104**

26 RC Circuits **106**

27 Magnetism I **108**

28 Magnetism II **111**

29 Magnetism III **114**

30 Magnetic Field of the Earth **117**

31 Weighing an Electron **120**

32 Nuclear Decay and Radiocarbon Dating **127**

33 Electromagnetic Induction **136**

34 Electromagnetic Induction II **142**

35 The Generator **147**

36 The LR Circuit **151**

37 The LRC Circuit **156**

38 Refraction of Light **161**

39 Refraction at Spherical Surfaces: Thin Lenses **164**

40 The Diffraction Grating **167**

41 The Interference of Light **168**

42 Diffraction of Light **172**

43 The Optical Spectrum of Hydrogen **178**

44 A Theory for the Hydrogen Atom **180**

45 Galilean Relativity **187**

46 The Twins Paradox **191**

A Treatment of Experimental Data **194**

B Introduction to DataStudio **196**

C Introduction to Excel **198**

C.1 Data and formulae 198

C.2 Graphs 198

C.3 Making Histograms 199

D Video Analysis **201**

E Instrumentation **203**

F Nuclear Safety **206**

1 Heat, Temperature, and Internal Energy

Name _____ Section _____ Date _____

Objective

To investigate the relationship between heat and temperature.

Apparatus

- Glass beaker
- Hot plate
- Ice
- Data Studio software and temperature probe
- Clamp and stand

Temperature of a Substance as a Function of Heat Transfer

As part of our quest to understand heat energy transfer, temperature, and internal energy of a substance, let's consider the temperature change as ice is changed to water and then to steam.

Activity 1: Predicting T vs. t for Water

Suppose you were to add heat at a constant rate to a container of ice water at 0°C until the water begins to boil. Sketch the predicted shape of the heating curve on the graph below using a dashed line. Mark the points at which the ice has melted and the water begins to boil.

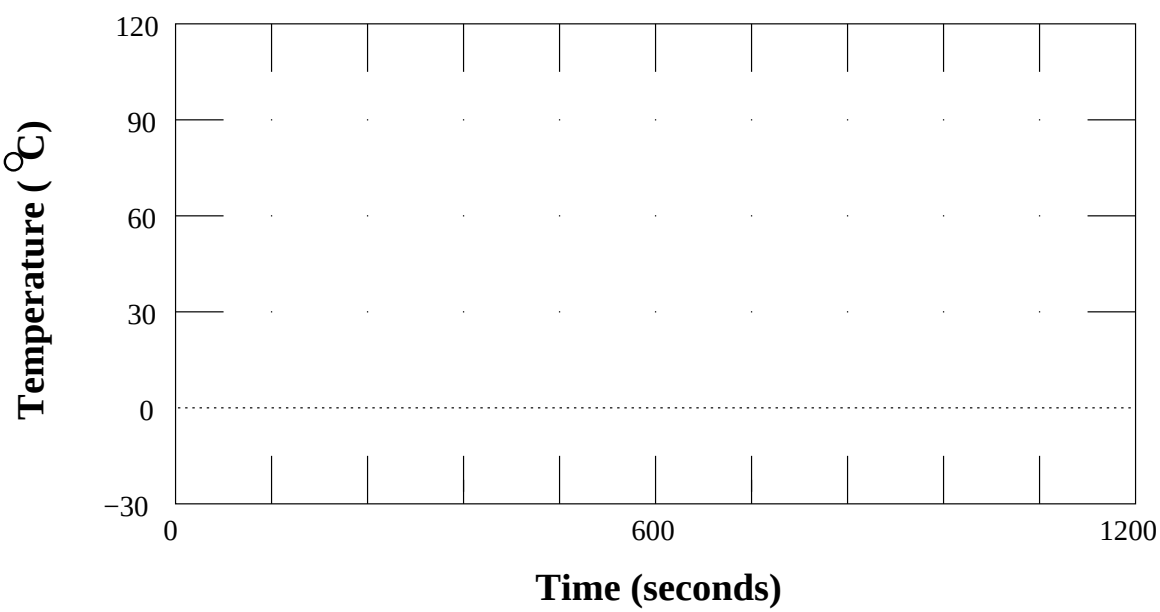

Activity 2: Measuring T vs. t for Water

(a) To test your prediction:

1. Fill the glass beaker at least half full of ice water and set it on top of the hot plate.

2. Suspend the temperature probe so that the end is submerged in the ice water but not touching the side or bottom of the beaker. You will need to use the clamp and stand to do this.
3. Open the *Heat, Temp, & Internal Energy* application in the 132 Workshop folder on the **Start** menu.
4. Turn on the hot plate and click the **Start** button on the monitor to begin recording data. The temperature of the water will be recorded on the graph shown on the monitor. While there is still ice, stir gently.
5. After the water begins to boil, turn off the hot plate and stop collecting data using the **Stop** button on the monitor.
6. Sketch the shape of the measured heating curve on the above graph using a solid line. Ignore small variations due to noise and uneven heating. Mark the points at which the ice has melted and the water begins to boil.

(b) Does your prediction agree with the measured heating curve? If not, what are the differences?

(c) What is the relationship between the temperature and the added heat while the ice is melting?

(d) What is the relationship between the temperature and the added heat after the ice has melted, but before the water begins to boil?

(e) What is the relationship between the temperature and the added heat while the water is boiling?

(f) If there are regions of the heating curve in which the temperature is not changing, what do you think is happening to the added heat in these regions?

2 Calorimetry

Name _____ Section _____ Date _____

Purpose

- To learn to use a method for measuring heat called calorimetry.
- To use calorimetry to determine the specific heat of aluminum and the heat of fusion of ice.

Apparatus

- Hypsometer and stand
- Hot plate
- Aluminum pellets
- Ice
- Compact scale (for measuring masses)
- Calorimeter
- Temperature probe
- Clamp and stand
- Safety goggles
- *DataStudio* software (Calorimetry)

Introduction

Calorimetry is a method for measuring heat. As applied in this experiment, the method involves the mixing together of substances initially at two different temperatures. The substances at the higher temperature lose heat and the substances at the lower temperature gain heat until thermal equilibrium is reached.

Activity 1: Statement of Conservation of Energy

If no heat is transferred to the surroundings, what is the relationship between the heat lost by the substances initially at high temperature and the heat gained by the substances initially at low temperature? Note: This is simply a statement of conservation of energy.

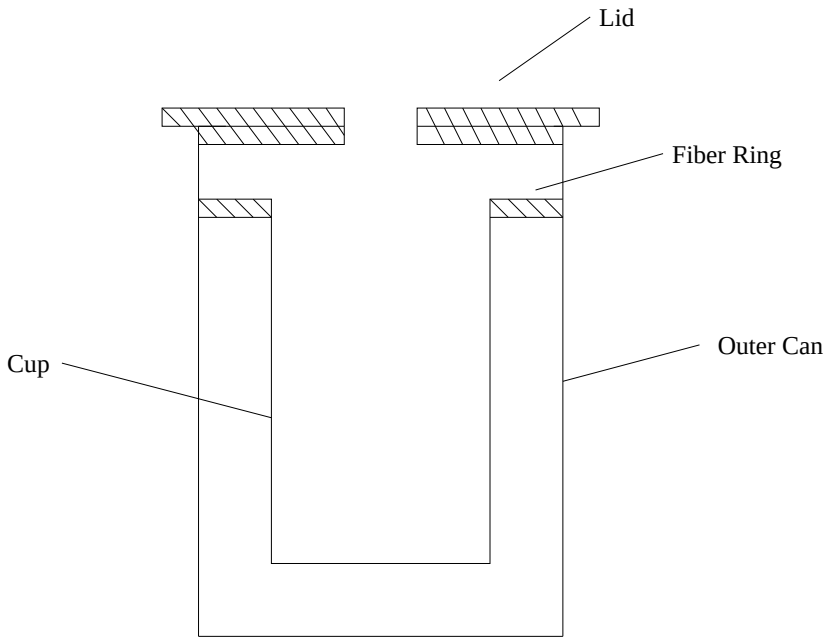

Experimental Equipment

A calorimeter, shown in the above figure, is used in this experiment to minimize the exchange of heat between the system and the surroundings. The inner calorimeter cup is thermally insulated from the surroundings by suspending it on a ring of material with low heat conductivity and surrounding it with a layer of air. Also the cup is shiny to minimize radiation loss. Hence, if the mixture of substances is placed inside the calorimeter cup, the heat lost to or gained from the surroundings can be ignored, and the above relationship can be used. The only part of the calorimeter which is involved in the calculation is the inner calorimeter cup which contains water and in which an exchange of heat between the hot and cold bodies takes place. The cup will undergo the same temperature change as the contained water. Of course, an instrument will have to be introduced to measure the temperature of the system, but the heat gained or lost by the instrument is small and can be ignored.

Activity 2: Specific Heat of Aluminum

(a) Fill the hypsometer (boiler) at least half full of water and start heating the water.

(b) Determine and record the mass of the hypsometer cup, m_h. Then fill it about half full with dry aluminum pellets. Determine and record the mass of the cup and pellets, m_{hp}, and calculate the mass of the pellets, m_p. Record the measurements in the space below.

(c) Fill the plastic beaker with ice water. Open the *Calorimetry* application in the 132 Workshop folder in the **Start** menu and start collecting data. To make sure the temperature probe is working properly place it in the ice water and check that it is reading approximately 0°C. If not, then consult your instructor.

(d) Place the hypsometer cup in the top of the hypsometer and put the temperature probe into the middle of the pellets. To do this, remove the pellets from the cup, place the temperature probe in the proper position (using the clamp and stand), then return the pellets to the cup.

(e) Determine and record the mass of the calorimeter cup, m_c. Fill this cup about half full of cold tap water. Determine and record the mass of the cup and water, m_{cw}, and calculate the mass of the water, m_w. Then place the calorimeter cup in the outer can and put the lid on.

(f) When the temperature of the pellets becomes constant, at or near 100°C, record the temperature of the pellets as T_p. Remove the probe from the pellets and put it in the cold water in the calorimeter cup. When the temperature of the water levels off, record it as T_w.

(g) Now, quickly but carefully, pour the pellets into the water in the calorimeter cup. Stir the water occasionally with the temperature probe and monitor the temperature of the mixture. When the temperature levels off, record this value as T. Click the **Stop** button on the monitor, print your graph of temperature as a function of time and include it in this unit.

(h) Write the complete heat equation and solve for the unknown specific heat of the metal. The specific heat of the calorimeter cup is 900 J/kg-°C.

(i) Look up the accepted value for the specific heat of aluminum and calculate the percent difference between this value and the one you determined above. Do the two values agree within experimental uncertainties? Comment on possible sources of error.

Activity 3: Specific Heat of Metals

(a) Repeat steps 2(a)-2(i) with pellets of a different metal besides aluminum. Record the the type of metal, the mass of the pellets, the temperature of the pellets just before you pour them in the cold water, and the temperature of the combined pellets, water, and cup.

(b) Use the equation you derived above for the unknown specific heat of the new metal. The specific heat of the calorimeter cup is 900 J/kg-°C.

(c) Look up the accepted value for the specific heat of your new metal and calculate the percent difference between this value and the one you determined above.

(d) Consult the other lab groups in class and record their values of the specific heat of aluminum and the second metal below. Calculate the average and standard deviation for each metal. Can you spot any trends in your data?

(e) The specific heats you measured above were in units of J/kg-°C. It is more illuminating to express the the specific heat in units of J/mole-°C, proportional to the specific heat per atom. Do this for each of the averages and standard deviations you obtained in part 3(d) by multiplying the result for each metal by its molar mass. Record the results below. Can you spot any trends in your data now? What effect do the standard deviations have on your conclusion?

Activity 4: Heat of Fusion of Ice

(a) The heat of fusion of ice is found experimentally as follows: A known mass of warm water is placed in the calorimeter cup and its temperature recorded. A known mass of ice at 0°C (with no water) is added to the water and allowed to melt. The final temperature of the mixture after the ice has melted is recorded. Perform the experiment and record the data in the space below.

(b) Write the complete heat equation and solve for the unknown heat of fusion of ice.

3 Heat of Vaporization of Nitrogen

Name _____ Section _____ Date _____

Objective

To measure the heat of vaporization of nitrogen.

Apparatus

- Force probe
- Lab stand
- Styrofoam cup
- Liquid nitrogen
- Power resistor
- Power supply
- Wires
- *DataStudio* Software (NitrogenVap)

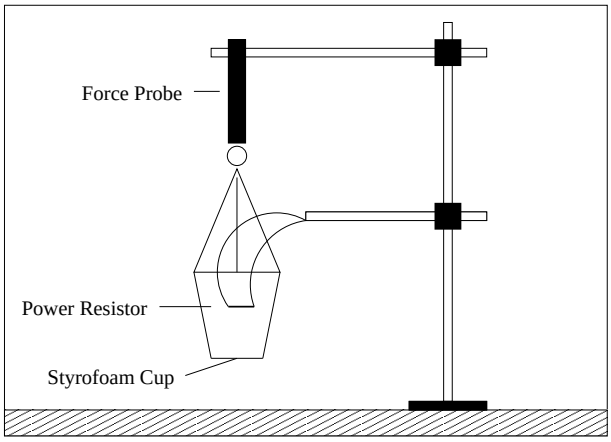

Introduction

The experimental setup is shown in the figure above. The styrofoam cup is filled with liquid nitrogen. The force transducer is used as an electronic balance to measure the mass of the liquid nitrogen as a function of time. The power resistor submerged in the liquid nitrogen converts electrical energy into heat. The power, or rate at which electrical energy is converted to heat, is determined from the voltage and current. The power supply will display both of these values. (Note: Power supply is not shown in the figure.)

Activity 1: Measuring the Heat of Vaporization of Nitrogen

(a) Perform the following steps:

1. Remove the load from the force probe and press the TARE button.
2. Adjust the power resistor so that it is as far down in the cup as possible without pushing down on the cup.
3. Fill the cup with liquid nitrogen.

4. Turn on the power supply.. Adjust the voltage and current controls on the power supply so that the current is 2.0 A. Record the values of the current, I, and the voltage, V, in the space below. Then turn off the power supply and refill the cup with liquid nitrogen if necessary.

5. Open the *NitrogenVap* application in the 132 Workshop folder in the **Start** menu.

6. The computer will measure the output of the force transducer every second. Start collecting data by clicking on the Start button and recording the force versus time for at least four minutes. When you are finished make a linear fit to the data using the Fit menu. The slope is related to the rate of evaporation of the liquid nitrogen. Calculate the rate of mass loss from this measured slope and enter the result in the space below. Print the graph of force versus time and attach a copy to the unit.

7. Turn on the power supply and repeat step 6.

8. Turn off the power supply and repeat step 6.

(b) Subtract the average of the absolute values of the two slopes when power was off from the absolute value of the slope when power was on. This is the net rate of evaporation caused by the energy supplied to the heater.

(c) Calculate the heat of vaporization, L_v, which is given by

$$L_v = \frac{power\ to\ heater}{net\ rate\ of\ evaporation} = \frac{VI}{net\ rate\ of\ evaporation}$$

(d) Look up the accepted value for the heat of vaporization of nitrogen and calculate the percent difference. Do the two values agree within experimental uncertainties? Comment on possible sources of error.

(e) Was the temperature of the liquid nitrogen changing during this experiment? Explain.

4 Boyle's Law

Name _____ Section _____ Date _____

Objective

To investigate the relationship between the pressure and volume of a gas.

Apparatus

- DataStudio 750 Interface
- Pasco Pressure Sensor
- Syringe
- Tubing

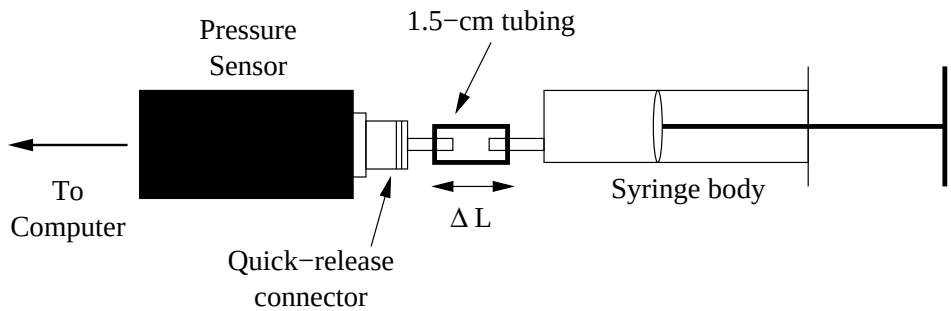

Apparatus for Boyle's Law.

Introduction

The behavior of a gas can be described in terms of the macroscopic quantities: temperature (T), pressure (P), and volume (V). The relationship between these quantities is given by the equation of state of the gas. A real gas behaves approximately as an ideal gas if it is far from liquefaction. In that case, the equation of state of an ideal gas can be used to describe a real gas. For a given mass of a gas, if one of the quantities P, T, or V is changed, a change in the other two quantities probably will result. However, if one of the quantities is kept constant, the relationship between the other two can be studied. The relationship between pressure and volume of an ideal gas is called Boyle's law.

The experimental apparatus is shown in the figure above. The gas is air contained in a syringe that has marking on its side to measure the volume of the syringe. A short tube connects the syringe with a pressure sensor that measures the pressure in the tube and converts that measurement into a signal that can be read by the DataStudio interface.

Activity 1: Relationship Between P and V of a Gas

(a) Check that there are no leaks in the apparatus by trying to compressing the syringe from the 20.0 ml position to the 10.0 ml position. It should become increasingly difficult to push the plunger as the volume decreases. If this is not the case, check the couplings for fit. If no problem is obvious, then consult your instructor.

(b) The initial volume of air in the syringe should be set at 20.0 ml. If your syringe is set to some other value, disconnect the quick release connector from the sensor by gently rotating it in the counter-clockwise direction as

you look from the syringe toward the pressure sensor. Next, move the piston to the 20.0 ml position, and then re-connect the quick release connector to the pressure sensor.

(c) **Data Recording**. Open the Boyle's Law activity located in the 132 Workshop Folder under the **Start** menu. Click on the window labeled *Volume and Pressure Table*. This is where your data will be displayed as you record it. This table display will show the values of the gas volume in the syringe which you will set by moving the piston to the appropriate marking on the syringe. You will record the pressure at each of these settings with the pressure sensor. To begin recording data, make sure the piston is at the 20-ml setting, and click the Start button. The Start button will change to a Keep button and the table display will show the value of the pressure next to the first volume value (20 ml) in the table. The reading in the pressure column should be colored red. Click the Keep button to record this pressure (notice the reading in the Pressure column beside the 20-ml entry changes from red to black). The next setting for the volume (18 ml) will appear in the Volume column of the data table display.

NOTE: For the first pressure reading at 20 ml, the air in the syringe will be in thermal equilibrium with the environment. This will not be the case immediately after compressing the syringe for the next reading. Therefore, you must allow one second for the system to return to thermal equilibrium after you compress the syringe and before clicking on Keep to record pressure values.

(d) Compress the syringe to the next value of the volume as listed in the data display table (i.e., the window labeled *Volume and Pressure Table*) and wait one second for the system to reach thermal equilibrium. Once thermal equilibrium is reached, click Keep to record the pressure. The data table display will automatically change to show the next value of the volume at which the pressure will be measured.

(e) Repeat step (d) for the remaining values of the volume listed in the table display. In other words, continue taking pressure measurements at the prescribed volume values in the data table display by moving the piston to the prescribed value and clicking on Keep after thermal equilibrium is reached. After you record the pressure for the last volume (8 ml), click the small, red box next to the Keep button (this is the stop button) to end data recording.

(f) **Analysis.** Click on the GraphDisplay to examine the plots of Syringe Volume Reading vs. Pressure, and the Volume to Pressure ratio (as a function of measuring time). Print the GraphDisplay and attach it to the unit. What happened to the pressure when the volume was reduced from 20 ml to 8 ml?

(g) From looking at the data, do the pressure and volume seem to be directly or inversely proportional? Explain.

(h) Copy your data into a spreadsheet and plot pressure versus volume. Next, fit your data with some power of the volume. Record the result here. What should you get for the power? Why?

(i) If pressure and volume are inversely proportional, then what can you say about the product of pressure and volume? Explain.

(j) Construct a table in the space below with the column headings: V (ml), P (kPa), and PV. What are the units of the last column? Add your answer to the heading for that column. Enter the results for P and V in this new table and calculate PV for each set of readings. Determine the mean value and the standard deviation σ for PV. Record the results in the form PV = Mean $\pm\sigma$. What does this result tell you about the product PV? What does it tell you about the relationship between P and V? Explain.

(k) You may have noticed that the syringe plunger does not always return to the 20 ml mark at the end of a data run. Give three reasons why this may happen, and explain which is most likely and why.

(l) Examine the plot below with results from two different data runs. How do you explain the difference between the curves for the different tubing lengths ($\triangle L$ in the diagram on page 11)?

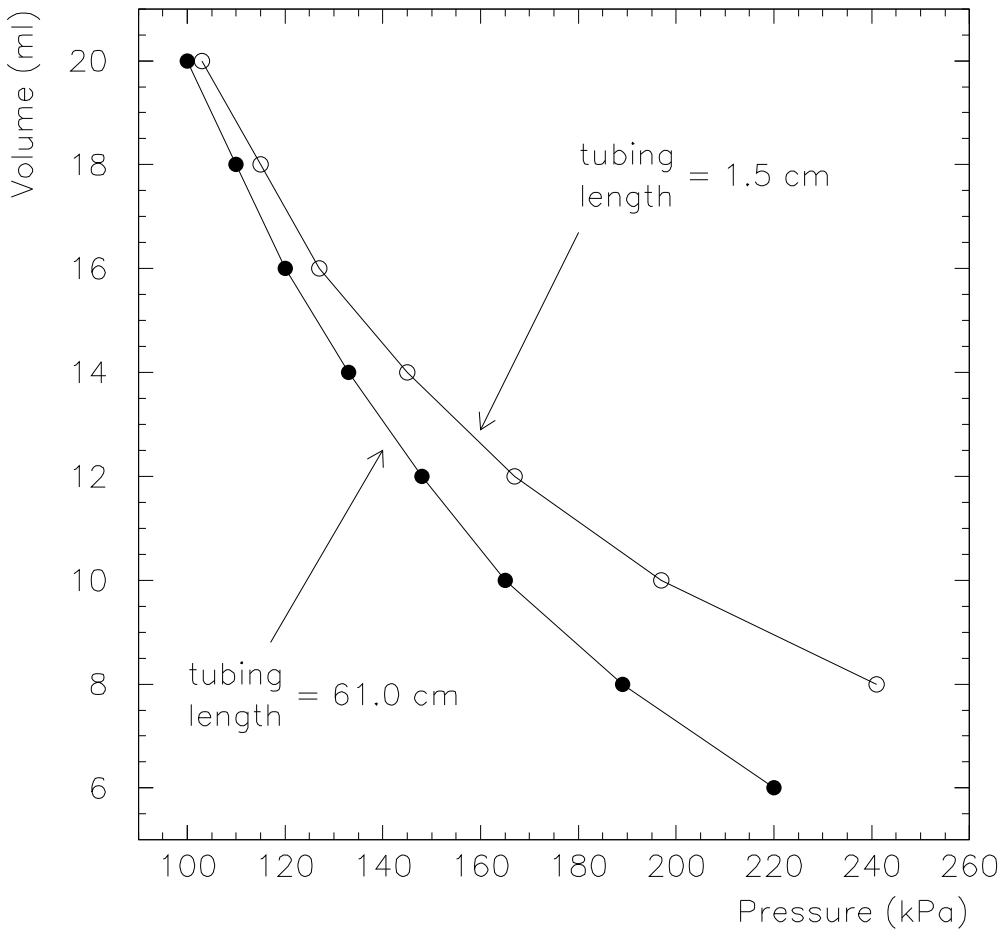

Results of measurement with Boyle's Law apparatus

different values of $\triangle L$, the tubing length.

5 Charles' Law

Name _____ Section _____ Date _____+

Objectives

To investigate the relationship between volume and temperature for a constant mass of gas at constant pressure and determine the value of absolute zero.

Apparatus

- Charles law apparatus with stand
- Temperature sensor
- Air chamber and tubing
- Hot plate
- Glass beaker
- Clamp and stand

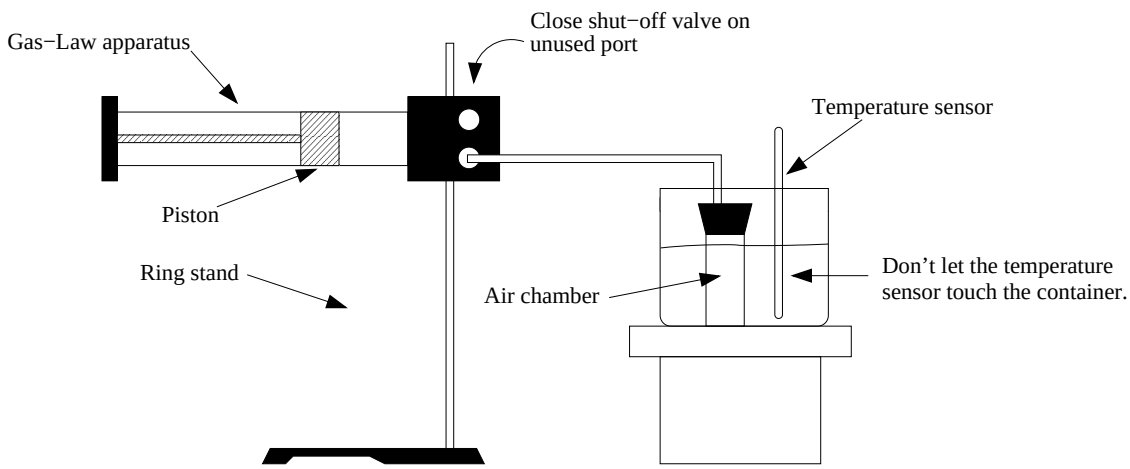

Figure 1: Charles' Law apparatus.

Introduction

The behavior of a gas can be described in terms of the macroscopic quantities: temperature (T), pressure (P), and volume (V). The relationship between these quantities is given by the equation of state of the gas. A real gas behaves approximately as an ideal gas if it is far from liquefaction. In that case, the equation of state of an ideal gas can be used to describe a real gas. For a given mass of a gas, if one of the quantities P, T, or V is changed, a change in the other two quantities probably will result. However, if one of the quantities is kept constant, the relationship between the other two can be studied. The relationship between temperature and volume of an ideal gas is called Charles' law.

The experimental apparatus is shown in the figure above and consists of an air chamber containing dry air. The pressure on the air in the chamber is due to atmospheric pressure applied through the movable piston.

Activity 1: V-T Relationship for a Gas

(a) Check that there are no leaks in the apparatus by trying to compressing the piston from the 100 mm position to the 10 mm position. It should become increasingly difficult to push the plunger as the volume decreases. If this is not the case, check the couplings for fit. If no problem is obvious, then consult your instructor.

(b) Open the *Charles' Law* activity in the 132 Workshop Folder under the **Start** menu. Click on the window labeled *Charles' Law Table*. This is where your data will be displayed as you record it. This table display will show the values of the gas temperature in the air chamber and the entry number. The data-taking procedure you will follow is described here first. One member of your team will heat the air chamber in the flask on the hot plate and call out the position of the piston. Another member will record the position settings by hand in the table below and click the **Keep** button on the *DataStudio* interface to record the temperature for that entry. To begin recording data, make sure the piston is at the low end of the scale, and click the **Start** button on the *DataStudio* interface. The **Start** button will change to a **Keep** button and the table display will show the value of the temperature next to the first entry in the table. The reading in the temperature column should be colored red. Click the **Keep** button to record this temperature (notice the reading in the Temperature column beside the entry number changes from red to black). The next entry number will appear in the Entry column of the data table display.

(c) Now, immerse the air chamber in a beaker of cold, tap water water and click **Start** on the *DataStudio* interface. You can monitor the temperature on the temperature versus time plot to the right. Make sure the set screw on the side of the piston is released.

(d) When the temperature is stable click **Keep** and that point will be recorded in the table. One team member should read off the piston position while the other writes it in the table at the same time.

(e) Now turn up the heat. The piston will move as the gas expands. Read out the position of the piston every one or two millimeters. The other team member will click **Keep** (recording the temperature) and record the piston position in the table.

(f) Repeat step (e) until the piston no longer moves or the water starts to boil.

(g) Calculate the volume of the apparatus for each piston position and plot this volume versus temperature. The diameter of the Gas-Law apparatus is written on its base.

Entry Number	Piston Position (mm)	Gas-Law Apparatus Volume (ml)	Temperature (°C)

(h) How are the volume and temperature related? Fit your data with the appropriate function and record the results here. Print your plot and attach it to this unit.

(h) Repeat steps c-h to obtain a second V-T curve. Record your data in the table below along with the fit to the V-T data.

Entry Number	Piston Position (mm)	Gas-Law Apparatus Volume (ml)	Temperature (°C)

Activity 2: Absolute Zero and the Kelvin Scale

(a) The absolute zero of temperature can be defined as the temperature at which the volume of an ideal gas is zero. Determine absolute zero from the equation of your graph by setting V = 0 and solving for T.

(b) Determine the percent difference between your value of absolute zero and the accepted value of -273°C. Are you happy or sad?

(c) Record the results from the other groups in class. Obtain an average and standard deviation and record it here. Are your results consistent with the class average? Explain.

6 The P-T Relationship of a Gas

Name _____ Section _____ Date _____+

Objectives

To investigate the relationship between pressure and temperature for a constant mass of gas at constant volume and determine the value of absolute zero.

Apparatus

- Pressure sensor
- Temperature sensor
- Air chamber and tubing
- Hot plate
- Glass beaker
- Clamp and stand

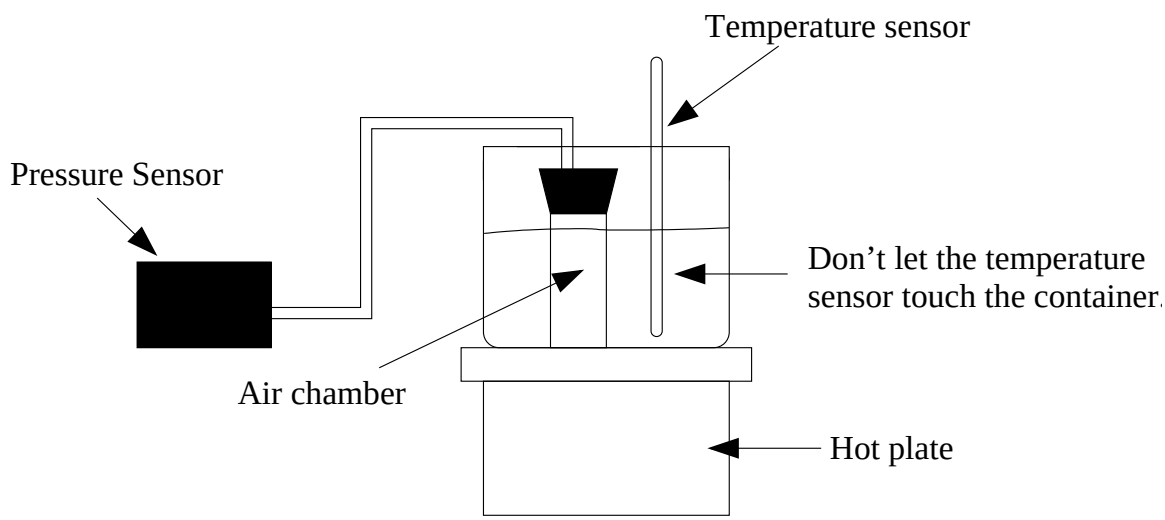

Figure 2: P-T apparatus.

Introduction

The behavior of a gas can be described in terms of the macroscopic quantities: temperature (T), pressure (P), and volume (V). The relationship between these quantities is given by the equation of state of the gas. A real gas behaves approximately as an ideal gas if it is far from liquefaction. In that case, the equation of state of an ideal gas can be used to describe a real gas. For a given mass of a gas, if one of the quantities P, T, or V is changed, a change in the other two quantities probably will result. However, if one of the quantities is kept constant, the relationship between the other two can be studied. The relationship between temperature and pressure of an ideal gas has no particular name associated with it.

The experimental apparatus is shown in the figure above and consists of an air chamber containing dry air. The volume of the gas is fixed.

Activity 1: P-T Relationship for a Gas

(a) Fill the beaker 3/4 full with cold tap water and place it on the hot plate. Immerse the air chamber in the water so that most of the volume of the air chamber is submerged. The air chamber will have to be held in place with a clamp and stand or it will float to the top. Set the temperature sensor in the water in such a way that it is not touching the side or bottom of the beaker.

(b) Open the *P-T* activity in the 132 Workshop Folder under the **Start** menu. Click on the window labeled *Temperature and Pressure Table*. This is where your data will be displayed as you record it. This table display will show the values of the gas pressure in the air chamber and the temperature of the heat bath. To begin recording data click the **Start** button on the *DataStudio* interface. The **Start** button will change to a **Keep** button and the table display will show the values of the temperature and pressure. Click the **Keep** button to record this temperature and pressure.

(c) Turn the hot plate on high. As the temperature rises, click the **Keep** button when the temperature is 5-7° above its first value. Continue recording the temperature and pressure at 5-7° intervals (by clicking the **Keep** button) until the water is close to boiling. You can monitor the temperature on the temperature versus time plot to the right (on the monitor) or by watching the temperature in the *Temperature and Pressure Table*. After your last reading, click the small red box next to the **Keep** button (this is the stop button) to end data recording.

(d) How are the pressure and temperature related? Print your data table, enter the data in *Excel* and plot pressure vs temperature on a linear graph, showing the equation of the graph. Print this graph and add it to this unit.

Activity 2: Absolute Zero and the Kelvin Scale

(a) The absolute zero of temperature can be defined as the temperature at which the pressure of an ideal gas is zero. Determine absolute zero from the equation of your graph by setting P = 0 and solving for T.

(b) Determine the percent difference between your value of absolute zero and the accepted value of -273°C. Are you happy or sad?

(c) Record the results from the other groups in class. Obtain an average and standard deviation and record it here. Are your results consistent with the class average? Explain.

7 Kinetic Theory of Ideal Gases[1]

Name _____ Section _____ Date _____

Objective

To derive a relationship between the macroscopic properties of an ideal gas and the microscopic motion of the unseen atoms that make up the gas. To do this activity you will need:

- A computer with an atomic and molecular motion simulation

Introduction

Do you believe in atoms? Our forefathers believed in the reality of witches. In fact, they thought that they had good evidence that witches existed, good enough evidence to accuse some people of being witches. We believe in atoms. Are we truly more scientific than they were?

Activity 1: Why Atoms!?

(a) List reasons why you do or do not believe that matter consists of atoms and molecules, even though you have never seen them with your own eyes.

(b) What happens when heat energy is being transferred into a substance? If you believe that substances are made of atoms and molecules, how would you use their existence to explain the change in volume of a heated gas?

Models of Pressure Exerted by Molecules

So far in physics we have talked about matter as if it were continuous. We didn't need to invent aluminum atoms to understand how a ball rolled down the track. But ever since the time of the fifth century B.C. Greek philosophers Leucippus and Democritus, some thinkers have believed in "atomism", a picture of the universe in which everything is made up of tiny "eternal" and "incorruptible" particles, separated by "the void". Today, we think of these particles as atoms and molecules.

In terms of every day experience molecules and atoms are hypothetical entities. In just the past 40 years or so, scientists have been able to "see" molecules using electron microscopes and field ion microscopes. But long before atoms and molecules could be "seen" experimentally, nineteenth century scientists such as James Clerk Maxwell and Ludwig Boltzmann in Europe and Josiah Willard Gibbs in the United States used these imaginary microscopic entities to construct models that made the description and prediction of the macroscopic behavior of thermodynamic systems possible. Is it possible to describe the behavior of an ideal gas that obeys the first law of thermodynamics as a collection of moving molecules? To answer this question, let's observe the pressure exerted by a hypothetical molecule undergoing elastic collisions with the walls of a 3D box. By using the laws of mechanics we can derive a mathematical expression for the pressure exerted by the molecule as a function of the volume of the box. If we then define temperature as being related to the average kinetic energy of the molecules in an ideal gas, we can show that kinetic theory is compatible with the ideal gas law and the first law of thermodynamics. This compatibility doesn't prove that molecules exist, but allows us to say that the molecular model would enable us to explain the experimentally determined ideal gas law.

[1] 1990-93 Dept. of Physics and Astronomy, Dickinson College. Supported by FIPSE (U.S. Dept. of Ed.) and NSF. Portions of this material may have been modified locally and may not have been classroom tested at Dickinson College.

Atomic Motion and Pressure

Consider a spherical gas molecule that has velocity $\vec{v} = v_x\hat{i}+v_y\hat{j}+v_z\hat{k}$ and makes perfectly elastic collisions with the walls of a three-dimensional, cubical box of length, width, and height l. Start the program called "*Atoms in Motion*" (in "*Physics Applications*"). You will see a screen like the one shown below. Experiment with it for a few moments. The *Run* and *Stop* buttons control the processing of the simulation of the gas atoms while the *Step* button allows you to watch the 'movie' one frame at a time.

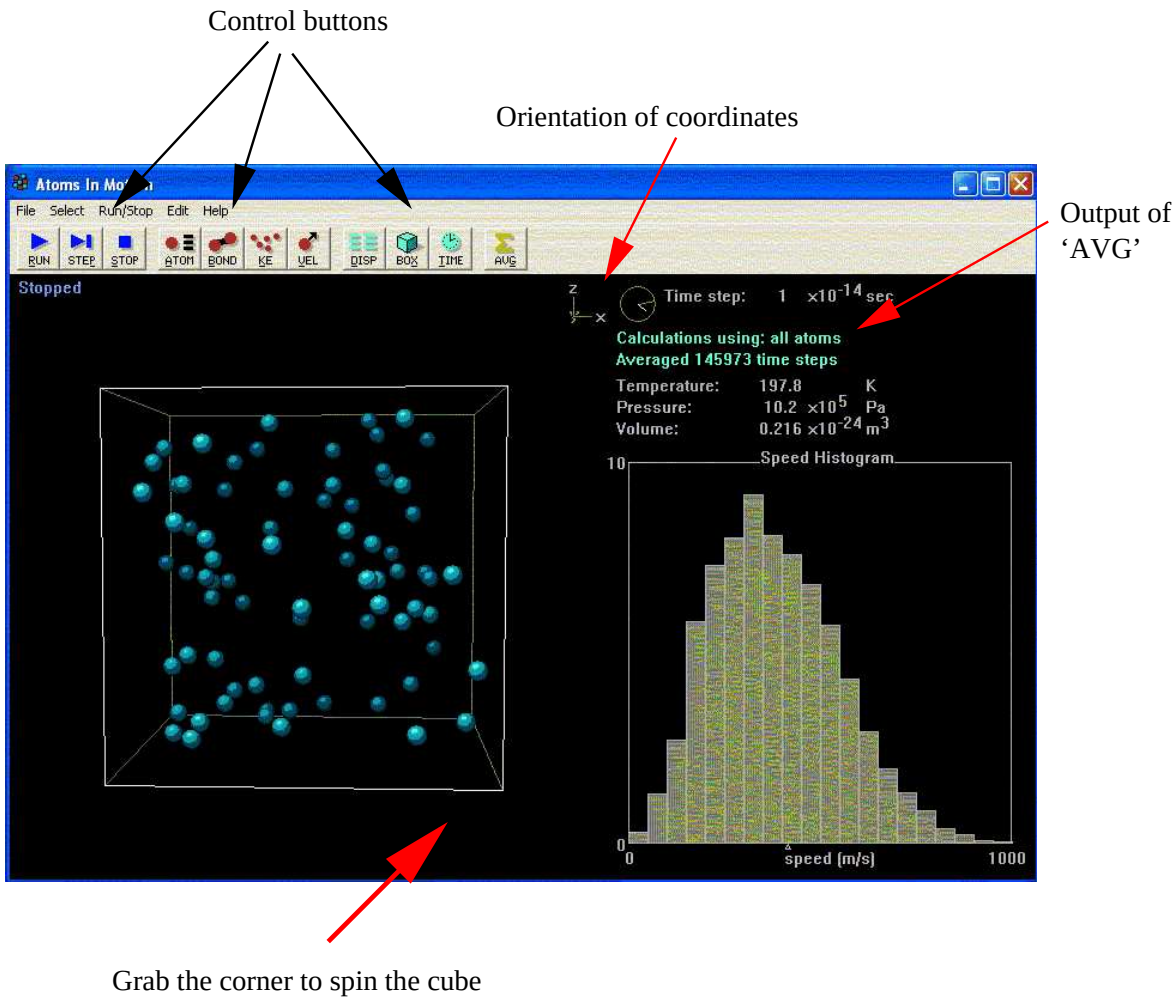

Figure 3: *Atoms in Motion* window.

Can we use the concept of molecules behaving like little billiard balls to explain why the ideal gas law relationship might hold? In the next activity you are to pretend you are looking under a giant microscope at a single spherical molecule as it bounces around in a three-dimensional box by means of elastic collisions and that you can time its motion and measure the distances it moves as a function of time.

If the molecule obeys Newton's Laws, you can calculate how the average pressure that the molecule exerts on the walls of its container is related to the volume of the box. The questions we have to consider are the following. What is the momentum change as the molecule bounces off a wall? How does this relate to the change in the velocity component perpendicular to the wall? How often will our molecule "hit the wall" as a function of its component of velocity perpendicular to the wall and the distance between opposite walls? What happens when the molecule is more energetic and moves even faster? Will the results of your calculations based on mechanics be compatible with the ideal gas law?

Activity 2: The Theory of Atomic Motion

(a) Stop the simulation if it's running and set the number of molecules to one. Do this by clicking on the *ATOM* button and getting a dialog box. Enter '1' for the number of Type A atoms and zero for all the others. Record the mass of the Type A atom. Click *OK* and the cube should now contain a single atom. If not, consult your instructor.

(b) The orientation of coordinates can be seen just above the right-hand corner of the cube (consult Figure 1 also). Suppose the molecule moves a distance $2l$ (across the cube and back) in the x-direction in a time Δt_x. What is the equation needed to calculate its x-component of velocity in terms of l and Δt_x?

(c) Suppose the molecule moves a distance $2l$ in the y-direction in a time Δt_y. What is the equation needed to calculate its y-component of velocity in terms of l and Δt_y?

(d) Suppose the molecule moves a distance $2l$ in the z-direction in a time Δt_z. What is the equation needed to calculate its z-component of velocity in terms of l and Δt_z?

(e) We will now measure the average time Δt_y for one complete round trip from the left side of the cube to the right side and back again. Click *AVG* and you will see some information printed in the color blue on the right-hand side of the *Atoms-in-Motion* window (see also Figure 1). The simulation takes small steps in time and calculates the positions of the atoms at the end of each time step. The number of these time steps taken is shown on the right-hand side and the size of each time step is printed at the top, right-hand-side of the window. Using the *Step* button let the atom in the cube move until it bounces off the left wall of the cube. Record the number of time steps in the space below.

(f) Now run or step the simulation until the atom bounces across the cube, hits the right-hand wall, comes back and strikes the left hand wall. Record the number of time steps. Calculate Δt_y and record it below.

(g) Each side of the cube has a length $l = 50 \times 10^{-10}$ m. Combine this with the previous result to determine v_y and record it.

(h) Repeat the above procedure for the top and bottom walls of the cube to get v_z.

(i) Rotate the cube by clicking and dragging one of the corners of the cube. Spin it until you can see the atom bounces between the walls in the direction of the x coordinate. Measure the x component of the speed of the atom using the same procedure as before.

(j) Write the expression for v_{total} in terms of the x, y, and z components of velocity. (Hint: This is an application of the 3-dimensional Pythagorean theorem.) Determine v_{total} for your atom. We will use these results in a little while to calculate the pressure exerted by our one-atom 'gas'.

(k) Record the value of the pressure and temperature for your 'gas' (as printed on the screen).

(l) We would like to eventually find the average kinetic energy of each atom or molecule in a gas so we now have to think about a gas with many atoms. Since the kinetic energy of a molecule is proportional to the square of its total speed, you need to show that if *on the average* $v_x^2 = v_y^2 = v_z^2$, then $\overline{v_{total}^2} = 3\overline{v_x^2}$.

(m) If the collisions with the wall perpendicular to the x direction are elastic, show that the force exerted on that wall for each collision is just $F_x = 2m\frac{v_x}{\Delta t_x}$ where m is the mass of the particles and Δt_x the mean interval between collisions with the wall. (Hint: Think of the form of Newton's second law in which force is defined in terms of the change in momentum per unit time so that $F = \frac{\Delta p}{\Delta t}$.)

Warning: Physicists too often use the same symbol to stand for more than one quantity. In this case, note that Δp (where "p" is in lower case) indicates the change in *momentum*, not pressure.

(n) Substitute the expression from part (b) for Δt_x to show that

$$F_x = \frac{mv_x^2}{l}$$

(o) We have assumed from the beginning that we have a cubical box of edge length l. Show that the pressure on the wall perpendicular to the x axis caused by the force F_x due to *one* molecule is described by the following expression.

$$P = \frac{mv_x^2}{l^3}$$

(p) Let's say that there are not one but N molecules in the box. What is the pressure on the wall now?

(q) Next, show that if we write the volume of our box as $V = l^3$, and recalling that

$$\overline{v_x^2} = \frac{\overline{v_{total}^2}}{3}$$

we can write the following expression.

$$P = N\frac{m\overline{v_{total}^2}}{3V}$$

(r) Finally, since the average kinetic energy of a molecule is just

$$< E_{kin} >= \frac{1}{2}m\overline{v_{total}^2}$$

show that the pressure in the box can be written in the following way.

$$P = \frac{2N < E_{kin} >}{3V}$$

(s) Use the previous result to calculate the pressure using v_{total}, the mass of the atom, N and V for your one-atom gas. Compare your result with the pressure you recorded above from the output of the simulation. Do they agree? Explain any differences.

8 Applying the Kinetic Theory[2]

Name _____ Section _____ Date _____

Objective

To derive the relationship between temperature and the kinematic properties of the monatomic molecules of an ideal gas. We will also calculate the specific heat per mole of an ideal, monatomic gas at constant volume using the kinetic theory and compare the prediction with data. To do this activity you will need:

- A computer with an atomic and molecular motion simulation

Kinetic Energy, Internal Energy, and Temperature

We have hypothesized the existence of non-interacting molecules to provide the basis for a particle model of ideal gas behavior. We have shown that the pressure of such a gas can be related to the average kinetic energy of each molecule:

$$P = \frac{2N\langle E_{kin}\rangle}{3V} \text{ or } PV = \frac{2}{3}N\langle E_{kin}\rangle$$

Pressure increases with kinetic energy per molecule and decreases with volume. This result makes intuitive sense. The more energetic the motions of the molecules, the more pressure we would expect them to exert on the walls. Increasing the volume of the box decreases the frequency of collisions with the walls, since the molecules will have to travel longer before reaching them, so increasing volume should decrease pressure if $\langle E_{kin}\rangle$ stays the same.

The Molar Specific Heat

The kinetic theory of gases uses the atomic theory to relate the macroscopic properties of gases to the microscopic features of the atoms and molecules that make up the gas. In this laboratory we will extend the calculations that we have made so far to include the molar specific heat of an ideal, monatomic gas. The success of that extension of the theory depends on how well the calculations reproduce the measured heat capacities of a variety of real (not ideal) gases.

Activity 1: Experimenting with the Gas Simulation Program

Open the *Atoms in Motion* program (in *Physics Applications*) on the *Start* menu. We are first going to explore the relationship between pressure and volume in our kinetic theory using the simulation.

(a) According to the ideal gas law $PV = nRT = Nk_BT$, where R is the universal gas constant and k_B is Boltzmann's constant. What should happen to the pressure of an ideal gas as its volume increases or decreases?

(b) We now want to run a more realistic simulation. Under the *ATOM* menu set the number of Type A atoms to 50 and set all the others to zero. Click on the *BOX* button and a new dialog box will appear. Check the box beside 'Floor conducts heat' and set the temperature to 200 K. Notice at the top that the box width is $l = 50 \times 10^{-10}\ m$. We have now set up a situation where one side of the cube is held at a constant temperature (*e.g.* it's sitting on a stove) so the collisions of the atoms with the floor are no longer elastic. The remaining sides of the cube do not transfer any energy (they're insulated) so elastic collisions still occur at those walls.

Start the simulation and make sure you are averaging the pressure over many time steps. You should see the number of averaged time steps increasing on the right-hand side of the *Atoms-in-Motion* window. If you don't see this information, click on *AVG* and it should appear.

[2] 1990-93 Dept. of Physics and Astronomy, Dickinson College. Supported by FIPSE (U.S. Dept. of Ed.) and NSF. Portions of this material may have been modified locally and may not have been classroom tested at Dickinson College.

(c) What happens to the pressure? What happens to the temperature of the gas? You will find that it can take several minutes of computer time for the temperature of the gas to reach equilibrium with the floor. Once the gas temperature is within $8 - 10\ K$ of the floor temperature, we can consider the gas and the floor to be in thermal equilibrium. Record the volume, pressure and temperature of the gas in the first line of the table below.

(d) Record the volume, pressure and temperature of the gas for five more volumes of the cube. Change the volume of the cube using the *BOX* menu and adjusting the box width. The volume is printed on the *Atoms-in-Motion* window. Plot your results and attach the graph to this unit. Are your results consistent with the ideal gas law and your prediction in part (a)? Are they consistent with the results of Experiment 4?

Volume of Box	Average Pressure	Temperature

(e) In the procedure above you should have found the pressure to be inversely proportional to the volume. How could you modify your plot to show the pressure is proportional to $1/V$? Make such a plot and fit it. How close is your data to following a straight line? Attach the plot to this unit.

(f) According to the ideal gas law $PV = nRT = Nk_BT$. What should happen to the pressure of an ideal gas as the number of particles increases or decreases? We will explore this idea with the simulation next.

(g) Start off with the gas parameters from the last 'run' of the simulation. Record the number of atoms, temperature, and pressure in the table below. Use the *ATOM* menu to change the number of atoms (or molecules) in the cube. Start the simulation. What happens to the pressure? Record the pressure and the number of molecules for four more values of the number of molecules and plot your results. Attach the plot to this unit. Are your results consistent with the ideal gas law and your prediction in part (f)?

Number of Molecules	Average Pressure	Temperature

Kinetic Theory and the Definition of Temperature

The model of an ideal gas we have just derived requires that

$$PV = \frac{2}{3}N\langle E_{kin}\rangle$$

But we have determined experimentally the ideal gas law:

$$PV = Nk_BT$$

What can we say about the average kinetic energy per molecule for an ideal gas? You can derive a relationship between temperature and the energy of molecules that serves as a microscopic (i.e. molecular) definition of temperature.

Activity 2: Microscopic Definition of Temperature

(a) From the two equations above, derive an expression relating $\langle E_{kin}\rangle$ and T. Show the steps in your derivation.

(b) In general, molecules can store energy by rotating or vibrating, but for an ideal gas of *point* particles (monatomic gas), the only possible form of kinetic energy is the translational motion of the particles. If we can ignore potential energy due to gravity or electrical forces, then the internal energy E_{int} of a gas of N particles is $E_{int} = N\langle E_{kin}\rangle$. Use this to show that for an ideal gas of point particles, E_{int} *depends only on N and T*. Derive the equation that relates E_{int}, N and T. Show the steps.

The microscopic and the macroscopic definitions of temperature are equivalent. The microscopic definition of temperature which you just derived is fundamental to the understanding of all thermodynamics!

Activity 3: Calculating the Molar Specific Heat

In this section we will generate a series of equations that we will then bring together in order to predict the molar specific heat at constant volume.

(a) Consider an ideal gas in a rigid container that has a fixed volume. How is the molar specific heat defined in terms of the heat added Q?

(b) If the gas is heated by an amount Q, then how much work is done against the fixed container? Recall the first law of thermodynamics and incorporate this result into your statement of the first law.

(c) Now use the equations of parts (a) and (b) to relate the change in internal energy ΔE_{int} to the molar specific heat.

(d) Write down an expression for the change in internal energy of the ideal gas in terms of $\langle E_{kin} \rangle$. (Suggestion: see part (b) of Activity 2.) How is $\langle E_{kin} \rangle$ related to the temperature? Incorporate this relationship into your expression for the change in the internal energy. You should find that

$$\Delta E_{int} = \tfrac{3}{2} N k_B \Delta T$$

where k_B is Boltzmann's constant and N is the number of molecules in the gas.

(e) Use the equations is parts (c) and (d) to relate the molar specific heat to the number of particles N and Boltzmann's constant k_B. You should find that

$$n C_V = \tfrac{3}{2} N k_B$$

where n is the number of moles.

(f) How is the number of molecules in the gas N related to the number of moles n and Avogadro's number N_A? Use this expression and the result of part (e) to show

$$C_V = \frac{3}{2} N_A k_B \text{ or } \frac{C_V}{N_A k_B} = \frac{3}{2}$$

Since $N_A k_B = R$, this can be written as

$$C_V = \frac{3}{2} R \text{ or } \frac{C_V}{R} = \frac{3}{2}$$

Activity 4: Comparing Calculations and Data

We now want to compare our calculation of the molar specific heat of an ideal, monatomic gas with the measured molar specific heats of some real gases. The table below lists some of those measurements.

Molecule	$\frac{C_V}{R}$	Molecule	$\frac{C_V}{R}$
He	1.50	CO	2.52
Ar	1.50	Cl_2	3.08
Ne	1.51	H_2O	3.25
Kr	1.49	SO_2	3.77
H_2	2.48	CO_2	3.42
N_2	2.51	CH_4	3.25
O_2	2.53		

(a) Has our theoretical calculation been successful at all? Which gases appear to be consistent with our calculation? Which gases are not? How do these two groups of real gases differ?

(b) Can you suggest an explanation for the partial success of the theory? Which one of the original assumptions that went into our kinetic theory might be wrong?

9 Einstein Solid

Name _____ Section _____ Date _____

Objective

To develop a quantum-mechanical model of an elemental solid (*e.g.* aluminum) and introduce the ideas of statistical mechanics.

Overview of the Model

One of the earliest successful applications of quantum mechanics was done by Albert Einstein in 1907 when he developed a model of an elemental solid (*i.e.* one that consists of a single element from the periodic table like aluminum, lead, *etc.*). We start by assuming that each atom in the solid is bound in a square lattice with each of six neighbors. Each bond is treated as a simple spring so the mechanical energy for a single atom is

$$E = \frac{1}{2}m(v_x^2 + v_y^2 + v_z^2) + \frac{1}{2}k(x^2 + y^2 + z^2) \tag{1}$$

where k is the spring constant of the bond, the coordinates x, y, and z are relative to the equilibrium position of the atom and v_x, v_y, and v_z are the components of the velocity. Einstein used an idea pioneered by Max Planck in 1901 and guessed the energy in the solid came in discrete pieces or quanta that were all the same size. Adding or removing these quanta heated or cooled the solid. Many years later the quantum mechanical energy E for a mass on a spring was found to be

$$E = (n_x + n_y + n_z + \frac{3}{2})\hbar\omega \tag{2}$$

where $\hbar$ is Planck's constant, ω is related to the spring constant k of the bond mentioned above, and n_x, n_y, and n_z represent the number of quanta associated with each degree of freedom of the spring. The degrees of freedom here correspond to the three possible directions each atom can vibrate. The size of each energy quantum is $\epsilon = \hbar\omega$. The total number of energy quanta in the solid is labeled q_A so the internal energy is $E_{int} = q_A\epsilon$. We then assume that all microstates of the solid have an equal probability of being populated. A microstate is a specific arrangement of the quanta on the atoms in the solid.

Activity 1: The Statistics of Matter

Before you embark on building the model of the Einstein solid consider some ideas from your previous study of gases. You will make some predictions here about the statistical nature of matter that you can refer back to later on in this unit.

(a) Consider a gas in a container. Would it violate Newton's Laws or any other physical law if all the particles in the gas collided in such a way that all of the gas particles ended up in the bottom half of the container leaving the top half empty?

(b) Is such a scenario likely? Explain.

(c) If you started out with all the gas in the bottom half of the container how likely is it to stay there?

The questions you answered above are addressing the notion of irreversibility. Many processes in nature appear to proceed in one 'direction' only. When you add milk to coffee it disperses throughout the coffee. After it is dispersed, the milk never re-concentrates into a blob of milk in the middle of the coffee. These processes go from

a more orderly configuration (a concentrated drop of milk) to a disordered state (milk spread throughout the liquid). The reverse never happens. We will return to this notion again in this laboratory.

Activity 2: Calculating the Multiplicity of Some 'Solids'

(a) You will first calculate the configurations of the quanta (the microstates) for a VERY simple solid consisting of a single atom! The number of atoms for solid A is $N_A = 1$ so there are three degrees of freedom $N_a = 3$ because there is one degree of freedom for each spatial direction. The atom's vibration can be decomposed into three components, one for each direction. Let the 'solid' contain two quanta of energy so $q_A = 2$. Make a table with the headings n_1, n_2, and n_3 and in each row enter one arrangement of the two quanta. Each row in the table is a microstate. Make a table with all of the possible microstates. The multiplicity Ω_A of the system is the number of all possible microstates. What is your multiplicity? Record it here.

(b) You can calculate the multiplicity Ω_A using the expression

$$\Omega(N_A, q_A) = \frac{(q_A + 3N_A - 1)!}{q_A!(3N_A - 1)!} \tag{3}$$

Make the calculation for $N_A = 1$ and $q_A = 2$. Does this agree with your result in part 2.a?

(c) Now do the same thing for a different 'solid'. This time for solid B, let $N_B = 2$ (two whole atoms!) and $q_B = 1$. How many degrees of freedom does solid B have? Make a table analogous to the one in part 2.a on the same sheet as before. What is the multiplicity of solid B? Record it here. Use the expression in Activity 2.b to check your calculation.

Activity 3: Putting the 'Solids' Together

When two solids are brought together heat/energy can flow between the two objects. For the model of the Einstein solid you are building this corresponds to energy quanta ($\hbar\omega$) moving from atom to atom and occupying different microstates of the combined system.

(a) Now bring the your solids A and B 'together' into a single system. What is N_{AB} the total number of atoms? What is the number of degrees of freedom of the combined system?

(b) What is the total number of energy quanta q_{AB} for the combined system?

(c) The system is in its initial macrostate. A macrostate is a configuration of the system defined here by the total number of atoms and quanta in each solid. In this case the macrostate is defined by $N_A = 1$, $q_A = 2$, $N_B = 2$, and $q_B = 1$. What is the total multiplicity Ω_{AB} for the combined system with $q_A = 2$ and $q_B = 1$ in its initial macrostate?

(d) Now take the energy quantum in solid B and put it in solid A, *i.e.*, let heat flow from solid B into solid A. This is now a macrostate where $q_A = 3$ and $q_B = 0$. What is the new multiplicity Ω_A for solid A and the multiplicity Ω_B for solid B?

(e) What is the multiplicity Ω_{AB} for the combined system (solids A and B)?

(f) Remember that a macrostate is defined by the combination of N_A, N_B, q_A, and q_B. Which macrostate had the greatest multiplicity, $(q_A = 2,\ q_B = 1)$ or $(q_A = 3,\ q_B = 0)$ (remember that N_A and N_B are the same in each configuration so we don't list those parameters here)?

(g) If the energy quanta can move from atom to atom which macrostate $(q_A = 2,\ q_B = 1)$ or $(q_A = 3,\ q_B = 0)$ is most probable? Why?

(h) If you started out in the $(q_A = 3,\ q_B = 0)$ macrostate is it more likely that you will remain in that macrostate of evolve to the $(q_A = 2,\ q_B = 1)$ macrostate? Why?

What you have discovered is a version of the irreversibility mentioned earlier, One macrostate $(q_A = 2, q_B = 1)$ is preferred over the other because it has more microstates than the other. This result depends critically on your assumption that all states are equally populated.

Activity 4: Using *StatMech* For More Complex Cases

You should have found in the previous activity that the ($q_A = 2,\ q_B = 1$) macrostate was more likely to occur and the process proposed in part 3.d is relatively unlikely. In other words, it is more likely for energy to be spread evenly throughout the system. This is good news because it means the statistical picture we are painting is consistent with reality. Remember what happens to the blob of milk in the coffee.

(a) You should realize that making the sorts of calculations you did in Activity 3 above would become rather painful for say $N_A = 300$ atoms. In order to push the model further you will use a software packaged called *StatMech* to perform the same calculations. To run the program go to the `Physics Applications` menu and click on `StatMech`. You should see a window like the one below. The top of the window has several entry boxes

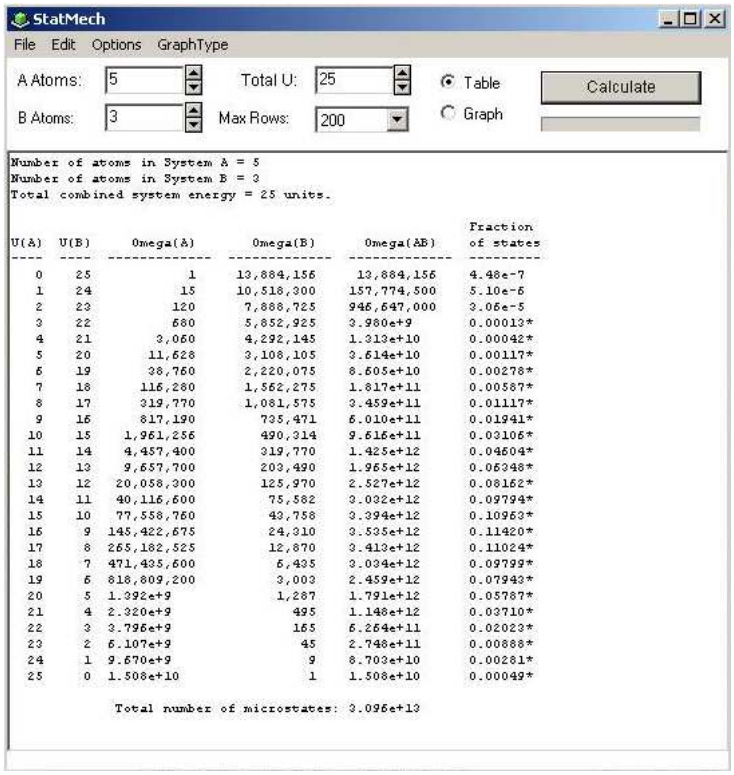

U(A)	U(B)	Omega(A)	Omega(B)	Omega(AB)	Fraction of states
0	25	1	13,884,156	13,884,156	4.48e-7
1	24	15	10,518,300	157,774,500	5.10e-6
2	23	120	7,888,725	946,647,000	3.06e-5
3	22	680	5,852,925	3.980e+9	0.00013*
4	21	3,060	4,292,145	1.313e+10	0.00042*
5	20	11,628	3,108,105	3.614e+10	0.00117*
6	19	38,760	2,220,075	8.605e+10	0.00278*
7	18	116,280	1,562,275	1.817e+11	0.00587*
8	17	319,770	1,081,575	3.459e+11	0.01117*
9	16	817,190	735,471	6.010e+11	0.01941*
10	15	1,961,256	490,314	9.616e+11	0.03106*
11	14	4,457,400	319,770	1.425e+12	0.04604*
12	13	9,657,700	203,490	1.965e+12	0.06348*
13	12	20,058,300	125,970	2.527e+12	0.08162*
14	11	40,116,600	75,582	3.032e+12	0.09794*
15	10	77,558,760	43,758	3.394e+12	0.10963*
16	9	145,422,675	24,310	3.535e+12	0.11420*
17	8	265,182,525	12,870	3.413e+12	0.11024*
18	7	471,435,600	6,435	3.034e+12	0.09799*
19	6	818,809,200	3,003	2.459e+12	0.07943*
20	5	1.392e+9	1,287	1.791e+12	0.05787*
21	4	2.320e+9	495	1.148e+12	0.03710*
22	3	3.796e+9	165	6.264e+11	0.02023*
23	2	6.107e+9	45	2.748e+11	0.00888*
24	1	9.670e+9	9	8.703e+10	0.00281*
25	0	1.508e+10	1	1.508e+10	0.00049*

Figure 1: The `StatMech` window showing the table of multiplicities for each microstate. Each row corresponds to a different value of q_A.

where you can set the number of atoms (N_A and N_B) and the total number of energy quanta in the system U. The parameter U is the total internal energy $_{int}$ in the system in units of $\epsilon = \hbar\omega$. It is equivalent to the sum $q_{AB} = q_A + q_B$. You can also set the number of rows of microstates to print out or choose to view a graph instead of the table. To test the operation of *StatMech* redo the calculations of the microstates that you did in Activity 3. Make sure your results in Activity 3 agree with the output of *StatMech*. You will also see there are other macrostates that were ignored in Activity 3 for simplicity.

(b) Now run *StatMech* for the case where $N_A = 10$, $N_B = 20$, $U = 500$. What is the value of q_A for the most probable macrostate? Record it here. Click on the button at the top of the *StatMech* window and choose graph. You will see a graph of the table and it should look something like Figure 3. The vertical axis is the probability of a particular macrostate divided by the maximum probability of any macrostate. The horizontal axis is U_A/U_{TOT} where U_A is the energy of solid A in units of ϵ (equivalent to q_A) and U_{TOT} is the total internal energy of the solid in units of ϵ (equivalent to the total number of quanta q_{AB}). What is the value of U_A/U_{TOT} for the most probable state? How is this value related to the value of q_A for the most probable macrostate? Also, explain in words what this plot is showing you.

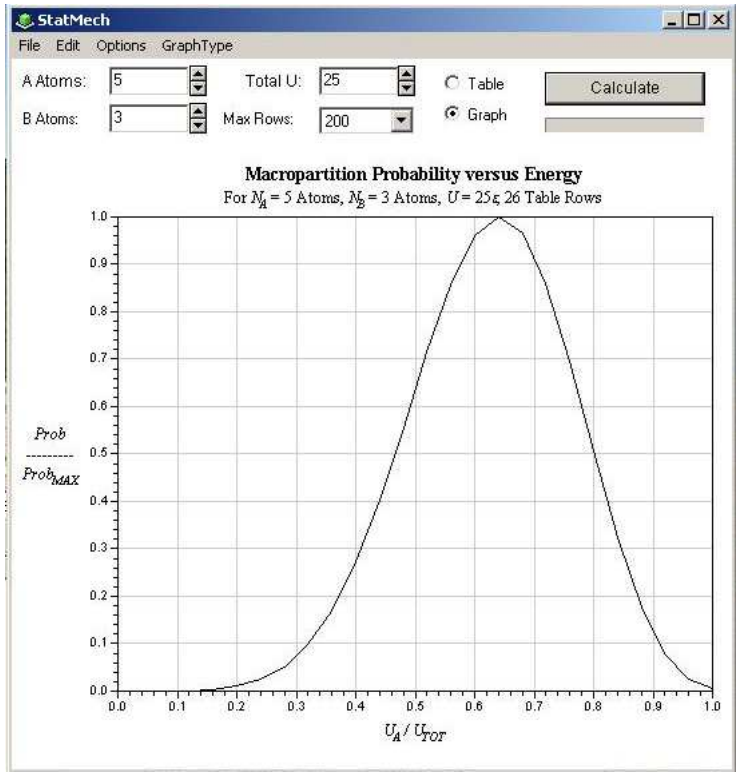

Figure 2: The `StatMech` window showing a graph of the multiplicities as a function of E_A/E_{int} where $E_A = q_A\hbar\omega$ and $E_{int} = q_{AB}\hbar\omega = (q_A + q_B)\hbar\omega$.

(c) How wide is the distribution of microstates? Measure this number by estimating the full-width-half-maximum (FWHM) from your graph. Do this by finding the largest value on the vertical axis, divide that value by two, and find the two points on either side of the peak where the distribution is equal to that half-maximum. Take the difference between these two points along the horizontal and this is the FWHM. Record your result here.

(d) Now repeat steps 4.b-c with $U = 100,000$ and N_A and N_B at their last values. What is the most probable value of U_A/U_{TOT} and the FWHM? How have things changed?

(e) Keeping $U = 100,000$ now repeat steps 4.b-c, but this time double the values of N_A and N_B. Record the most probable macrostate and the FWHM. Repeat this doubling of the number of atoms in each solid while keeping U fixed at least 3-4 times. Record the most probable macrostate and the FWHM each time along with N_A and N_B.

(f) How does the value of q_A for the most probable macrostate change as the number of atoms increases?

(g) How does the FWHM change as the number of atoms increases?

Activity 5: Irreversibility

You will now use the results from the previous Activity to delve into some of the implications of the statistical mechanics of the Einstein solid.

(a) As the number of atoms increases, what happens to the probability for finding the system in a macrostate different from the most probable one? Use the results of your calculations to explain your answer.

(b) When the system is in a macrostate far from the most probable one, what is the most likely thing to happen as energy or heat flows around the system?

(c) For the last calculation in Activity 4 what is the probability of the state with the minimum value of q_A? In other words what is the probability that all of the quanta would end up all in solid B? What is the probability of the most probable macrostate?

(d) Go back to the questions in Activity 1 and look at your answers. Do they still appear to be correct? A situation where all of the gas particles end up in one part of the container is a macrostate of the system analogous to the situation in Activity 5.c where all of the quanta end up in one of the solids and not the other. Answer those questions in Activity 1 again in terms of microstates, macrostates, and probability.

The behavior you are seeing here is for an Einstein solid, but is actually typical for most macroscopic systems. These systems have a large number of atoms or molecules with a variety of different energy states available.

They evolve to the most probable macrostate and there is essentially no chance to occupy a state far from the most probable one. When two materials are first put in thermal contact they may be far from the most probable macrostate, but they equilibrate at that most probable one (where the temperatures are equal) and never go back. This is irreversibility.

Activity 6: Homework Problems (E - exercise, P - problem)

1. (E) Consider the following 'gas'. It consists of four atoms in a cubical box. At any instant, there is a 50% chance of each atom being in the left half of the box (L) or the right half (R). Make a table showing all the microstates of this system. (Hint: There are 16.) How many macrostates are there? How many microstates are in each macrostate?

2. (E) Show that for N gas atoms in a box, the number of possible microstates is 2^N when microstates are defined by whether a given molecule is in the left half of the box or the right half of the box. The volumes of each half are equal.

3. (E) Imagine that we have an ideal gas consisting of 15 molecules. We can flip the signs of each of the three velocity components of a given molecule w without changing its overall energy (and thus without changing the gas's macrostate). How many possible patterns of sign choices are there?

4. (E) Calculate the multiplicity of an Einstein solid with $N = 1$ and $E_{int} = 6\epsilon$ by directly listing and counting the microstates. Check your work by using equation 3.

5. (E) Calculate the multiplicity of an Einstein solid with $N = 1$ and $E_{int} = 5\epsilon$ by directly listing and counting the microstates. Check your work by using equation 3.

6. (E) Use equation 3 to calculate the multiplicity of an Einstein solid with $N = 4$ and $E_{int} = 10\epsilon$.

7. (E) Use equation 3 to calculate the multiplicity of an Einstein solid with $N = 3$ and $E_{int} = 15\epsilon$.

8. (E) How many times more likely is that the combined system of solids described in the table below will be found in macropartition 3:3 than in macropartition 0:6, if the fundamental assumption is true?

9. (E) How many times more likely is it that the combined system of solids describe in the table below will not be found in macropartition 3:3 than it is to be found in macropartition 0:6, if the fundamental assumption is true?

10. (E) Consider the system consisting of a pair of Einstein solids in thermal contact. A certain macropartition has a multiplicity of 3.7×10^{1024}, while the total number of microstates available to the system in all macropartitions is 5.9×10^{1042}. If we look at the system at a given instant of time, what is the probability that we will find it to be in our certain macropartition?

11. (E) Consider the system consisting of a pair of Einstein solids in thermal contact. A certain macropartition has a multiplicity of 1.2×10^{346}, while the total number of microstates available to the system in all macropartitions is 5.9×10^{362}. If we look at the system at a given instant of time, what is the probability that we will find it to be in our certain macropartition?

12. (E) Consider the system consisting of a pair of Einstein solids in thermal contact. Imagine that it is initially in a macropartition that has a multiplicity of 8.8×10^{123}. The adjacent macrostate closer to the equilibrium macrostate has a multiplicity of 4.2×10^{1234}. If we look at the system a short later, how many times more likely is it to have moved to the second macropartition than to have stayed with the first?

Macropartition	E_A	E_B	Ω_A	Ω_B	Ω_{AB}
0:6	0	6	1	28	28
1:5	1	5	3	21	63
2:4	2	4	6	15	90
3:3	3	3	10	10	100
4:2	4	2	15	6	90
5:1	5	1	21	3	63
6:0	6	9	28	1	28
				Total=	462

Table 1: Possible macropartitions for $N_A = 1$, $N_B = 1$, $E_{int} = 6\epsilon$.

13. (E) Consider the system consisting of a pair of Einstein solids in thermal contact. Imagine that it is initially in a macropartition that has a multiplicity of 7.6×10^{3235}. The adjacent macropartition closer to the equilibrium macropartition has a multiplicity of 4.1×10^{3278}. If we look at the system a short time later, how many times more likely is it to have moved to the second macropartition than to have stayed with the first?

14. (P) Suppose you put 100 pennies in a cup, shake it up, and toss them all into the air. (a) After landing, how many different head-tail arrangements (microstates) are possible for the hundred pennies? (b) What is the probability of finding exactly 50 heads? (c) 49 heads? (d) 1 head?

15. (P) You ask your roommate to clean up a mess he or she made in your room. Your roommate refuses, because cleaning up the mess would violate the second law of thermodynamics, and campus security's record of your roommate's legal violation is already excessive. Gently but firmly explain why complying will not put your roommate at risk of such an infraction.

16. (P) The classic statement of Murphy's law reads, 'If something can go wrong, it will.' Explain how this is really a consequence of the second law of thermodynamics. (Hint: What is the entropy of 'wrong' in a given context compared to the entropy of 'right'?)

17. (P) Run the *StatMech* program to answer the questions below.

    (a) For two Einstein solids in contact with $N_A = N_B = 100$ and $E_{int} = 200\epsilon$ answer the following questions. (1) How many times more likely is the system to be found in the center macropartition than in the extreme macropartition where $E_A = 0$ and $E_B = 200\epsilon$ (2) What is the range of values that E_A is likely to have more than 99.98% of the time? (3) if E_A were initially to have the extreme value 0, how many times more likely is it to move to the next macropartition nearer the center than to remain in the extreme one?

    (b) Answer the same question as in (a) for a run where you scale everything up by a factor of 10, so that $N_A = N_B = 1000$ and $E_{int} = 2000\epsilon$.

    (c) Answer the same question as in (a) for a run where $N_A = N_B = 1000$ and $E_{int} = 200\epsilon$. Comment on the effect that increasing just the size of the system by a factor of 10 has on these answers.

    (d) Answer the same question as in (a) for a run where $N_A = N_B = 100$ and $E_{int} = 2000\epsilon$. Comment on the effect that increasing just the energy available to the system by a factor of 10 has on these answers.

18. (P) Consider two Einstein solids in thermal contact. The solids have different values of N but are identical in all other respects. It is plausible, since every atom in the combined system is identical, that in equilibrium

the energy will be distributed among the solids in such a way that the average energy per atom is the same. Use *StatMech* to test this hypothesis in the situation where $E_{int} = 1000\epsilon$ and N_A and N_B have various different values such that $N_A + N_B = 1000$. (Set `Max Rows` to 1000 so that you can see every macropartition).

(a) Is it true in most cases that in the most probable macropartition the solids have energies such that the average energy per atom in each is the same? Is it strictly true in every case? Answer these questions by discussing the values N_A and N_B you tested, and whether the actual most probable macropartition is the same as that predicted by the hypothesis.

(b) In any case where the hypothesis does not work, does increasing both N_A and N_B by a factor of 10 or 100 (but leaving U alone) yield a result more or less consistent with the hypothesis?

(c) Speculate as to the value of this hypothesis in the large-N limit.

19. (P) For the following questions, you will find that using *StatMech* is by far the fastest way to calculate the multiplicity.

(a) What is the entropy of an Einstein solid with 5 atoms and an energy of 15ϵ? Express your answer as a multiple of k_b.

(b) What is the entropy of an Einstein solid with 50 atoms and an energy of 100ϵ? Express your answer as a multiple of k_b.

20. (P) A certain macropartition of two Einstein solids has an entropy of $305.2k_b$. The next macropartition closer to the most probable one has an entropy of $335.5k_b$. If the system is initially in the first macropartition and we check it again later, how many times more likely is it to have moved to the other than to have stayed in the first?

21. (P) My calculator cannot display e^x for $x > 230$. One can calculate e^x for larger values of x as follows. Define y such that $x = y \ln 10$. This means that $e^x = e^{y \ln 10} = (e^{\ln 10})^y = 10^y = 10^{x \ln 10}$. Note that we can calculate 10 raised to a non-integer power (for example, 103.46) as follows: $10^{3.46} = 10^{3+0.46} = 10^3(10^{0.46}) = 2.9 \times 10^3$. Use these techniques to solve the following problem. The entropy of the most probably macropartition for a certain system of Einstein solids is $6025.3k_b$, while the entropy of an extreme macropartition is only $5755.4k_b$. What is the probability of finding the system at a given time in the extreme macropartition compared to that of finding it in the most probable macropartition?

22. (P) In principle, the entropy of a isolated system decreases a little bit whenever random processes cause its macropartition to fluctuate away from the most probable macropartition. We can certainly see this with small systems. But is this really a possibility for a typical macroscopic system? Imagine that we can measure the entropy of a system of two solids to within 2 parts in 1 billion. This means that we could just barely distinguish a system that has an entropy of 4.99999999 J/K (eight 9s!) from one that has 5.00000000 J/K. (This is a reasonable entropy for a macroscopic system).

(a) Imagine that the entropy of the equilibrium macropartition is 5.00000000 J/K. Show that the approximate probability that at any given time later we will find the system in a macropartition with entropy 4.99999999 J/K (*i.e.*, with an entropy that is only barely measurably smaller) is about 10315,000,000,000,000 times smaller that the probability we will still find it to have entropy 5.00000000 J/K. (Hint: See problem 17.)

(b) Defend the statement that the entropy of an isolated system in thermal equilibrium never decreases.

10 Entropy and Temperature

Name _____ Section _____ Date _____

Objective

To explore the connection between the fundamental definition of entropy and temperature.

Overview

Consider the microscopic definition of the entropy of a system

$$S = k_B \ln \Omega \tag{1}$$

where k_B is Boltzmann's constant and Ω is the multiplicity or number of microstates. A microstate is defined by a particular arrangement of energy quanta among the atoms. A macrostate is defined by the total number of energy quanta q and the number of atoms N. We are building a model of an elemental solid (*e.g.*, like aluminum) where the total internal energy in the solid E_{int} is described by

$$E_{int} = q\hbar\omega \tag{2}$$

where $\hbar$ is Planck's constant divided by 2π and ω is a constant that characterizes the strength of the bonds between the atoms. The parameter q is the total number of quanta in the system and is a constant. These quanta are statistically distributed over the N atoms of the solid so all possible states of the system are equally likely and the multiplicity Ω is

$$\Omega = \frac{(q + 3N - 1)!}{q!(3N - 1)!} \quad . \tag{3}$$

This model of an elemental solid is called an Einstein solid.

We want to find a connection between the entropy defined in Equation 1 and the temperature. Recall how temperature is usually defined relative to some properties of matter like the freezing and boiling points of water. You are developing the microscopic picture of entropy, but it won't be successful until you can connect it to the observed behavior of bulk matter and our familiar notions of temperature.

Activity 1: The Entropy of Einstein Solids in Thermal Equilibrium

(a) To start connecting the entropy to the temperature you have to study the behavior of the entropy as the energy changes. To do this we will study two Einstein solids (A and B) in thermal equilibrium with each other. Their total internal energy will be

$$E_{int} = q_{AB}\hbar\omega = (q_A + q_B)\hbar\omega \tag{4}$$

where q_A and q_B are the numbers of energy quanta in each solid and q_{AB} is their sum.

Use the program *StatMech* (see the `Physics Applications` menu) for the configuration where you choose $N_A > 100$, $N_B > 80$ and $U > 400$. The label U in the *StatMech* window refers to the total number of energy quanta in the system in units of $\hbar\omega$ and is equivalent to q_{AB} here. An example of the output of *StatMech* is shown in Figure 1. The first two columns in the lower panel of Figure 1 represent $U(A)$ and $U(B)$, the energies in each individual solid (again in units of $\hbar\omega$) and are equivalent to q_A and q_B. After you perform the calculation with *StatMech* scan quickly down the column labeled 'Omega(AB)'. If any of the exponents you see exceed the value 307, then run the calculation again with smaller inputs until no exponent exceeds 307. This limitation is a restriction on MicroSoft *Excel* that you will use later to make plots. Record your values of N_A, N_B, and U.

(b) Now generate plots of $S_{AB} = S_A + S_B$, S_A, and S_B from the *StatMech* table. You can do this with *Excel*, but there are some intermediate steps necessary. Start Microsoft *Word* first. Next, go to the *StatMech* window, highlight the table, copy it (see the `Edit` menu on the *StatMech* window), and paste it into the *Word* document. In *Word* edit out all the commas (',') and asterisks ('*') in the file (use the `Replace` option under the `Edit`

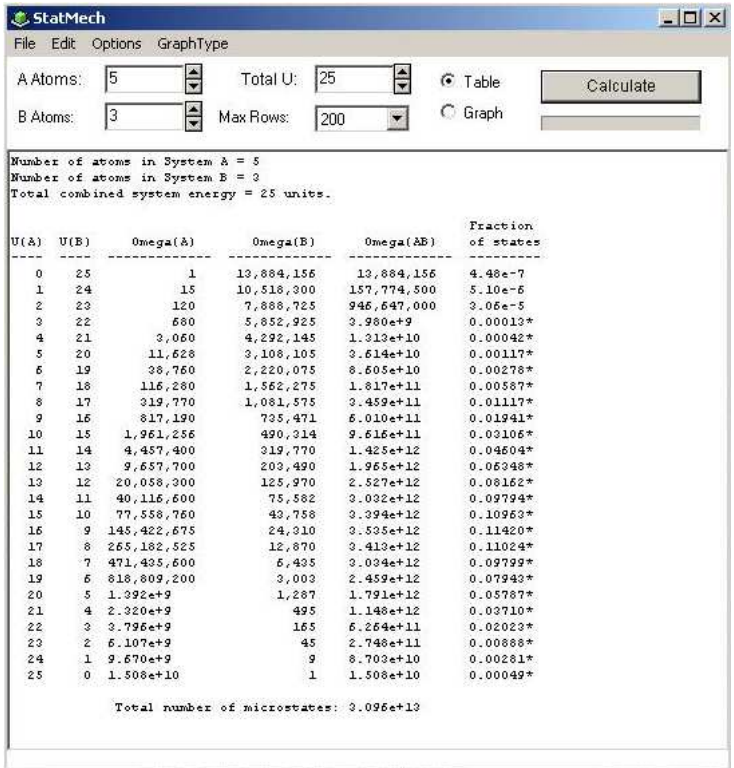

U(A)	U(B)	Omega(A)	Omega(B)	Omega(AB)	Fraction of states
0	25	1	13,884,156	13,884,156	4.48e-7
1	24	15	10,518,300	157,774,500	5.10e-6
2	23	120	7,888,725	946,647,000	3.06e-5
3	22	680	5,852,925	3.980e+9	0.00013*
4	21	3,060	4,292,145	1.313e+10	0.00042*
5	20	11,628	3,108,105	3.614e+10	0.00117*
6	19	38,760	2,220,075	8.605e+10	0.00278*
7	18	116,280	1,562,275	1.817e+11	0.00587*
8	17	319,770	1,081,575	3.459e+11	0.01117*
9	16	817,190	735,471	6.010e+11	0.01941*
10	15	1,961,256	490,314	9.616e+11	0.03106*
11	14	4,457,400	319,770	1.425e+12	0.04604*
12	13	9,657,700	203,490	1.965e+12	0.06348*
13	12	20,058,300	125,970	2.527e+12	0.08162*
14	11	40,116,600	75,582	3.032e+12	0.09794*
15	10	77,558,760	43,758	3.394e+12	0.10963*
16	9	145,422,675	24,310	3.535e+12	0.11420*
17	8	265,182,525	12,870	3.413e+12	0.11024*
18	7	471,435,600	6,435	3.034e+12	0.09799*
19	6	818,809,200	3,003	2.459e+12	0.07943*
20	5	1.392e+9	1,287	1.791e+12	0.05787*
21	4	2.320e+9	495	1.148e+12	0.03710*
22	3	3.796e+9	165	6.264e+11	0.02023*
23	2	6.107e+9	45	2.748e+11	0.00888*
24	1	9.670e+9	9	8.703e+10	0.00281*
25	0	1.508e+10	1	1.508e+10	0.00049*

Figure 1: The `StatMech` window showing the table of multiplicities for each microstate. Each row corresponds to a different value of q_A.

menu). Save the Word file, but save it as a plain text ('.txt') file. You can now open the file in *Excel*. When you open the file, *Excel* pops up a `Text Import Wizard` that will guide you through the format of the input file. The defaults usually seem to work. Use *Excel* to calculate and plot on one graph S_{AB}, S_A, and S_B as a function of q_A. Print out your plot and attach it to this unit.

(c) What is q_A for the most probable macrostate? What mathematical condition can you impose on the total entropy S_{AB} to determine the most probable macrostate? How do you think the temperatures of solids A and B are related at the most probable microstate?

(d) How are the slopes of S_A and S_B related to one another at the most probable macrostate?

(e) How is E_A, the energy in solid A related to q_A? How is E_B, the energy in solid B related to q_A? Remember that q_{AB} is a constant and $q_{AB} = q_A + q_B$. Calculate the differentials dE_A and dE_B and rewrite the answer in part 1.d in terms of dS_A/dE_A and dS_B/dE_B.

Activity 2: Relating Entropy and Temperature

(a) Using the spreadsheet you generated in Activity 1, calculate dS_A/dq_A as a function of q_A and plot it. You can do this to an adequate approximation by doing taking the difference between S_A at adjacent values/rows of q_A. To do this suppose your spreadsheet has the values of S_A in column H. The *Excel* syntax for estimating the derivative for the first value of q_A (the first row) is '`=(H2-H1)/1.0`' where `H2` is the value in the second row and `H1` is the value in the first row. The numerator of one is redundant, but it shows you are approximating the derivative using the data from points that differ by 1.0 in q_A, the number of quanta in solid A. The syntax for dS_A/dq_A for the second value of q_A is '`=(H3-H2)/1.0`' and so on. Do the same for dS_B/dq_A and dS_{AB}/dq_A. Does the slope of S_{AB} pass through zero at the correct spot (recall part 1.c)? How are dS_A/dq_A and dS_B/dq_A related at the most probable macrostate. Does you plot agree with that result?

(b) If the energy E_A and q_A of solid A increases what should the temperature of solid A do? If the energy E_A of solid A increases what happens to dS_A/dq_A in your plot? Do the temperature and dS_A/dq_A change in the same way or in a different way as E_A increases?

(c) We want to come up with a relationship between temperature and the entropy. From the results above (parts 1.a-e) you should have found

$$\frac{dS_A}{dE_A} = \frac{dS_B}{dE_B} \tag{5}$$

and

$$T_A = T_B \tag{6}$$

for the most probable macrostate. This means there is some function of the temperature T such that

$$f(T) = \frac{dS}{dE} \tag{7}$$

for each solid that will be equal at equilibrium. We want $f(T)$ to behave like the temperatures we are accustomed to using. In other words, as the energy in the solid increases T should increase. Recall part 2.b and the behavior of dS/dE as T increases. Try to guess a mathematical form of $f(T)$ that acts like 'normal' temperatures and one that doesn't. Explain your reasoning.

Solid	dE/dT per mole	Solid	dE/dT per mole

Table 2: Molar specific heats ($(1/n)dE/dT$) for several elemental solids.

(d) How would you choose which of the forms you guessed in part 2.c is the correct one?

Activity 3: Determining $f(T)$ and the Heat Capacity

In the previous Activity you should have found that the mathematical form of $f(T)$ has to be something like $1/T^n$ where n is some positive number. This is necessary because your graphs should show that as the energy E_A (and the number of quanta q_A) of the solid increases $f(T) = dS/dE$ goes down. To make sure the temperature T behaves reasonable (and goes up with E_A and q_A) $f(T)$ must be some inverse of function of T. To decide exactly which function is right requires comparing Equation 7 or some result from it to some data.

Recall the table of heat capacities we generated in the laboratory entitled *Calorimetry*. Use those results to fill in Table 1 making sure that you are using molar heat capacities. The heat capacities are constant with respect to temperature and are similar in value to one another. These are the data that will help us determine $f(T)$. To calculate dE/dT we must find a relationship between E and T for the Einstein solid.

(a) Start with Equations 1 and 7 and the chain rule and show the following.

$$\frac{dS}{dE} = k_B \frac{1}{\Omega} \frac{d\Omega}{dE} \tag{8}$$

(b) Use Equation 2 to show

$$dE = \hbar\omega dq \qquad \text{and} \qquad \frac{d\Omega}{dE} = \frac{1}{\hbar\omega}\frac{d\Omega}{dq} \qquad . \tag{9}$$

(c) Starting with Equations 1 and 3 one can show

$$\frac{d\Omega}{dq} = \frac{3N\hbar\omega}{E}\Omega \qquad . \tag{10}$$

Combine this equation (number 10) and the results from 3.a-b to get a relationship for dS/dE for the Einstein solid in terms of N and E. Set that expression equal to $f(T)$, and solve for E the internal energy. It is the derivative of this last equation ($(1/n)dE/dT$) that will give you the molar specific heat. What function of $f(T)$ will give a result that is independent of temperature when you take the derivative with respect to T of your expression for the internal energy E?

(d) What is the final form of Equation 7 and $f(T)$?

(e) Determine the mean and standard deviation of the heat capacity of the elemental solids in Table 1. Calculate the molar specific heat ($(1/n)dE/dT$) for the Einstein solid using your results from parts 3.c-d. Is the molar specific heat for the model of the Einstein solid consistent with the measured ones?

Activity 4: The Second Law of Thermodynamics

(a) Go back to your plots of the entropy as a function of q_A from part 1.b. Consider two Einstein solids that are brought together at a value of q_A that is higher than the equilibrium one at the most probable macrostate. Choose a value of q_A that is halfway between the most probable value and the maximum. Once the two Einstein solids are in contact, how will the system evolve? What happens to S_A and S_B? Do they go up, down, or stay the same? What happens to the total entropy S_{AB}? In fact, based on your plot from part 2.b, is there any circumstance where S_{AB} will not increase?

(c) To vividly see what happens when Einstein solids come in thermal contact, run the program *equilib.exe*

available in the `Physics Applications` menu. This program starts with two Einstein solids with all the energy quanta in solid B. It simulates the evolution of the two solids as they march toward thermal equilibrium. Click `Evolve` to see the simulation run.

What you should have discovered in the previous part is that the entropy of the combined systems always increases regardless of what configuration the Einstein solids are in when they come in contact. The system always evolves to the most probable, most disordered macrostate where the temperatures will be equal and the entropy is a maximum. The energy quanta are most spread out. This result is stated in several different ways, but the most succinct is simply $\Delta S > 0$ for an isolated system. The entropy of an isolated system always increases. This is called the Second Law of Thermodynamics.

Activity 4: Homework Problems

1. (E) An object's entropy is measured to increase by 0.1 J/K when we add 35 J of energy. What is its approximate temperature? (Assume that the object's temperature does not change much when we add the 35 J.)

2. (E) A certain Einstein solid's entropy changes from $305.2k_b$ to $338.1k_b$ when we add 1 unit ϵ of energy. What is the value (and units) of k_bT/ϵ for this solid? If $\epsilon = 1.0\ eV$, what is its temperature T?

3. (E) Does it make sense to talk about the temperature of a vacuum? If so, how could you measure or calculate it? If not, why not?

4. (E) An Einstein solid in a certain macrostate has a multiplicity of 3.8×10^{280}. What is its entropy (expressed as a multiple of k_B)?

5. (E) A pair of Einstein solids in a certain macropartition has multiplicities of 4.2×10^{320} and 8.6×10^{132}. What are the entropies of each solid? What is the total entropy of the system in this macropartition? (Express entropies as multiples of k_b.)

6. (E) Is it really true that the entropy of an isolated system consisting of two Einstein solids never decreases? (Consider a pair of very small solids.) Why is this statement more accurate for large systems than for small systems? Explain in your own words.

7. (P) In lab we argued on fairly fundamental grounds that $dS/dU = f(T)$. In principle, we could define $f(T)$ to be anything that we like: this would amount to defining temperature and its scale. Still, some definitions would violate deeply embedded preconceptions about the nature of temperature. For example, the simplest definition of temperature would be $dS/dU = T_{new}$. Show that this definition

   (a) Would imply that T_{new} has units of K^{-1} and

   (b) Would imply that heat would flow spontaneously from objects with low T_{new} to objects with high T_{new}. This would imply that object with low values of T_{new} are hot, while objects with high values T_{new} are cold (we might want to call T_{new} so defined *coolness* instead of *temperature*). While we could define temperature in this way, it would really fly in the face of convention (if not intuition).

   (c) If we did define coolness T_{new} in this way, what ordinary temperature T would an object with absolutely zero coolness ($T_{new} = 0$) have? What about something that is infinitely cool ($T_{new} = \infty$)?

8. (P) Imagine that the entropy of a certain substance as a function of N and U is given by the formula $S = Nk_b \ln U$. Using the definition of temperature, show that the thermal energy of this substance is related to its temperature by the expression $U = Nk_bT$.

9. (P) Imagine that the multiplicity of a certain substance is given by $\Omega(U, N) = Ne^{\sqrt{NU/\epsilon}}$, where ϵ is some unit of energy. How would the energy of an object made out of this substance depend on its temperature? Would this be a 'normal' substance in our usual sense of temperature.

10. (P) Consider an Einstein solid having $N = 20$ atoms.

(a) What is the solids temperature when it has an energy of 10ϵ, assuming that $\epsilon = h\omega = 0.02eV$? Calculate this directly from the definition of temperature by finding S at 10ϵ and 11ϵ, computing $dS/dU \approx [S(11\epsilon) - S(10\epsilon)]/\epsilon$, and then applying the definition of temperature. (You will find that your work will go faster if you use *StatMech* to tabulate the multiplicities.)

(b) How does this compare with the result from the formula $U = 3Nk_bT$ (which is only accurate if N is large and $U/3N\epsilon > 1$)?

(c) If you have access to *StatMech*, repeat for $N = 200$ and $U = 100\epsilon$. (Hint: If your calculator cannot handle numbers in excess of 10^{100}, use the fact that in $(a \times 10^b) = \ln a + b \ln 10$).

11. (P) A newly-created material has a multiplicity

$$\Omega = \alpha NE$$

where N is the number of atoms in the solid, E is the total, internal energy in the solid, and α is a constant of proportionality.

(a) How does the temperature of the new material depend on the internal energy?

(b) What is the molar heat capacity for this solid?

(c) Could this material really exist? Why or why not?

12. (P) A newly-created material has a multiplicity

$$\Omega = \beta ME^2$$

where N is the number of atoms in the solid, E is the total, internal energy in the solid, and α is a constant of proportionality.

(a) How does the temperature of the new material depend on the internal energy?

(b) What is the molar heat capacity for this solid?

(c) Could this material really exist? Why or why not?

11 Music to Our Ears: Standing Waves in Strings

Name _____ Section _____ Date _____

Aim:

- to study the natural modes of vibration of a stretched string

Equipment:

- string vibrator and power supply
- inelastic braided string
- 2 clamps
- superpulley
- mounting rod for the superpulley
- mass and hanger set
- balance
- tape measure

How do we make musical sounds? To make a sound , we need something that vibrates. If we want to make musical notes you usually need the vibration to have an almost constant frequency: that means stable pitch. We also want a frequency that can be easily controlled by the player. In electronic instruments this is done with electric circuits or with clocks and memories. In non-electronic instruments, the stable, controlled vibration is produced by a standing wave. Here we discuss the way strings work. This also a good introduction for studying wind instruments, because vibrating strings are easier to visualise than the vibration of the air in wind instruments.

Introduction

Waves are oscillations in an elastic medium:

- your own vocal cords (the medium) vibrating as air is forced over them by your lungs;
- a stretched string (the medium) on a musical instrument vibrating as it is bowed, hammered or plucked;
- pressure oscillations in a column of air (the medium) in a wind instrument, organ pipe or your own oral and nasal cavities;
- radio waves whose electric and magnetic fields oscillate between buildings on a downtown street (here the medium is the air, although the radio waves could vibrate between the buildings even if there were no air).

In each case the medium has an equilibrium state, and when displaced or otherwise perturbed from that state, experiences a force which tends to restore it to equilibrium. For small perturbations, the restoring force is proportional to the displacement and the medium becomes a simple harmonic oscillator.

Background

Standing waves (stationary waves) are produced by the interference of two traveling waves, both of which have the same wavelength, speed and amplitude, but travel in opposite directions through the same medium. The necessary conditions for the production of standing waves can be met in the case of a stretched string by having waves set up by some vibrating body, reflected at the end of the string and then interfering with the oncoming waves.

One characteristic of every standing wave pattern is that there are points along the medium which appear to be standing still. These points, sometimes described as points of no displacement, are referred to as nodes. There are other points along the medium which undergo vibrations between a large positive and and large negative displacement. These are the points which undergo the maximum displacement during each vibrational cycle of the standing wave. In a sense, these points are the opposite of nodes, and so they are called antinodes. A standing wave pattern always consist of an alternating pattern of nodes and antinodes. When a standing wave pattern is established in a medium, the nodes and the antinodes are always located at the same position along the medium; they are "standing still." It is this characteristic which has earned the name "standing wave."

A stretched string has many natural modes of vibration (three examples are shown below). If the string is fixed at both ends then there must be a node at each end. It may vibrate as a single segment, in which case the length (L) of the string is equal to 1/2 the wavelength (λ) of the wave. It may also vibrate in two segments with a node at each end and one node in the middle; then the wavelength is equal to the length of the string. It may also vibrate with a larger integer number of segments. In every case, the length of the string equals some integer number of half wavelengths.

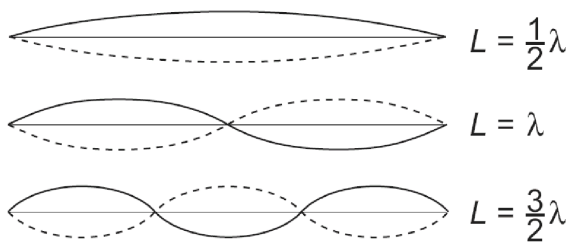

If you drive a stretched string at an arbitrary frequency, you will probably not see any particular mode; many modes will be mixed together. But, if the tension and the string's length are correctly adjusted to the frequency of the driving vibrator, one vibrational mode will occur at a much greater amplitude than the other modes. For any wave with wavelength (λ) and frequency f, the speed, v, is:

$$v = \lambda f \tag{11}$$

The speed of a wave on a string is also given by:

$$v = \sqrt{\frac{T}{\mu}} \tag{12}$$

where T is the tension in the string and μ is the linear density (mass/length) of the string.

In this experiment, standing waves are set up in a stretched string by the vibrations of an electrically-driven String Vibrator. The tension in the string equals the weight of the masses suspended over the pulley. You can alter the tension by changing the masses. L is the length of the string and n is the number of segments. (Note that n is not the number of nodes). Since a segment is 1/2 wavelength then

$$\lambda = \frac{2L}{n} \qquad n = 1, 2, 3, ... \tag{13}$$

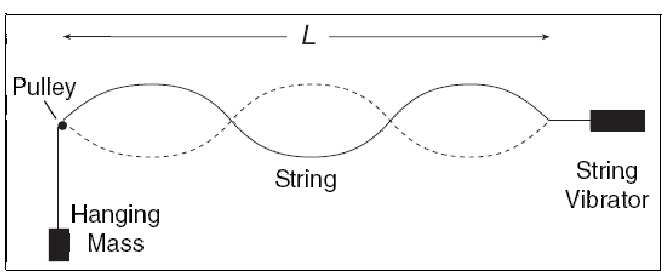

Procedure

1. Measure the exact length of a piece of string several meters long. Measure the mass of the string and calculate the linear density (mass/length). (If your balance is not precise enough to measure that length of string, use a longer piece of string to calculate the linear density.)

2. Clamp the String Vibrator and pulley about 100 cm apart. Attach the string to the vibrating blade, run it over the pulley, and hang about 100 g of mass from it. Cut off the excess string.

3. Measure from the knot where the string attaches to the String Vibrator to the top of the pulley. This is distance L. (L is not the total length of the string that you measured in **1** .)

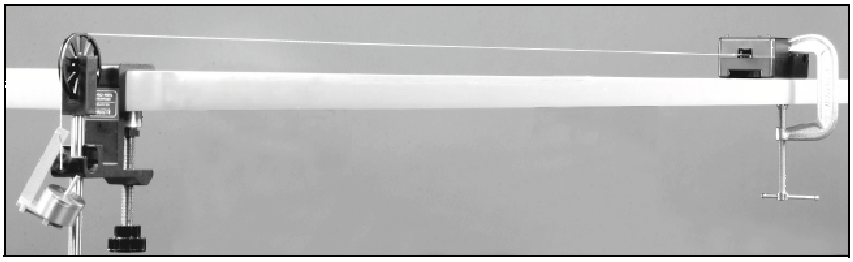

4. Connect the AC power supply to the String Vibrator.

5. Adjust the tension by adding to or subtracting from the hanging mass so that the string vibrates in 2 segments. Adjust the tension further to achieve "clean" node at the center. Also check the end of the vibrating blade; the point where the string attaches should be a node. It is more important to have a good node at the blade than it is to have the largest amplitude possible. However, it is desirable to have the largest amplitude possible while keeping a good node.

6. Record the hanging mass, m (do not forget to include the mass of the hanger). How much uncertainty is there in your value? By how much can you change the hanging mass before you see an effect? Record the uncertainty.

Part A: Speed of the Wave

a. Calculate the tension (including the uncertainty) in the string.

b. Calculate the speed v_A (including uncertainty) of the wave from your observed values of tension (T) and

linear density (μ). Record your calculated value with the uncertainty and the correct number of significant figures.

c. Calculate the speed v_B from the wavelength (λ) and frequency (f). (In the U.S. $f = 60.0$ Hz.)

d. Compare the two values (v_A and v_B) of speed. What is the difference? How does the difference compare to the uncertainty that you determined in **b** ?

e. Calculate the percentage by which v_A deviates from v_B.

$$\%Deviation = \frac{v_A - v_B}{v_B} \times 100\% \tag{14}$$

f. Repeat the analysis for standing waves of three and four segments. Record all your data in a table below.

Part B: Linear Density

a. Produce standing waves of 3, 4, 5, etc. segments in the string. Get as many as you can. Record the mass, m, (including uncertainty) and the number of segments, n, in a table.

b. For every value of mass, calculate the tension (including uncertainty) in the string.

c. In Excel, plot a graph of T versus n and attach it at the end of this activity. Describe in words the shape of the graph.

d. For every value of n, calculate $\frac{1}{n^2}$. In Excel, plot the T versus $\frac{1}{n^2}$ graph. Does the graph look linear?

e. Find the slope (including uncertainty) of the best fit line through this data.

f. Combine the equations in the **Background** section, and show that the tension can be written as:

$$T = 4\mu f^2 L^2 \frac{1}{n^2} \tag{15}$$

Thus the slope of an T versus $\frac{1}{n^2}$ graph is $4\mu f^2 L^2$.

g. Use the slope from your graph to calculate the density, μ, of the string. Also calculate the uncertainty of μ.

h. Compare this measured value of density to the accepted value. (You calculated the accepted value of μ from the mass and length of the string).

i. Calculate the percent deviation of the measured value of μ from the accepted value.

$$\%Deviation = \frac{Measured - Accepted}{Accepted} \times 100\% \tag{16}$$

Further Investigations

1. Hang a mass on the string with a value that is about halfway between the masses that produced standing waves of 3 and 4 segments. The string should show no particular mode. Place a "bridge" so that you can see the exact fundamental ($n = 1$) between the String Vibrator and the bridge. What is the wavelength?

Slide the bridge away from String Vibrator until the string vibrates in 2 segments. How does the wavelength of the two-segment wave compare to the wavelength of the previous one segment wave?

Why is a standing wave created only when the bridge is at certain locations? What are these locations called?

2. If a strobe is available, observe the standing wave on a string with the strobe light. Draw a diagram explaining the motion of the string.

12 Resonance in Tubes

Name _____ Section _____ Date _____

Objectives:

- Determine the resonant frequency for a tube open at one end.
- Determine tube lengths at resonance for a tube of variable length.
- Determine the velocity of sound in air in the laboratory (two ways).

Introduction

The Economy Resonance Tube is designed for the study of resonance in columns of air. The tube set includes a movable inner tube with a closed end and an outer tube which is open at both ends. The inner tube also includes a measuring tape to easily find the length of the air column. To adjust the length of the closed tube, simply slide the inner tube until the desired length appears on the measuring tape. Open tube experiments can also be performed by removing the inner tube.

In order that the tube resonate, the frequency of the vibrating air must coincide with the natural frequency of the tube (which may be its fundamental or one of its overtones). For the Economy Resonance Tube, which is closed at one end, this requirement is met if the tube length is an odd number of quarter wavelengths of the sound waves produced by the source ($L = \lambda/4, 3\lambda/4, 5\lambda/4$, etc., where L is the length of the tube and λ is the wave length of the sound). Note that if the length of the tube is gradually increased while the source is vibrating, the distance between successive resonance positions is $\lambda/2$.

Note: Due to edge effects at the open end of a tube, the effective length of the tube depends on the radius of the opening. Thus, $L_{eff} = L + 0.6r$, where L_{eff} is the *effective* length, L is the length measured, and r is the tube radius.

Apparatus:

- Economy Resonance Tube
- Open speaker
- Sine wave generator
- 2 banana plug leads
- Sound sensor
- Meter stick
- Data Studio 750 Interface
- Thermometer

Room Temperature (°C) _____ Tube radius (m) _____

Activity 1: Fixed tube length

1. Connect the open speaker to the sine wave generator using standard banana plug leads.
2. Adjust the length of the tube to 50 cm (check with meter stick).
3. Place the tube in front of the speaker in such a way that the tube is open at one end (the speaker can be set at an angle relative to the tube length).
4. Set the sound sensor inside the tube and connect it to the Data Studio interface.
5. To activate the sound sensor, perform the following sequence: Start up *DataStudio* by going to *Start* → *Programs* → *Physics Applications* → *DataStudio*. Click on *Create Experiment*, then *Setup*, then *Add Sensor or Instrument*. Scroll down to *Sound level sensor* and select, then click *OK*. Double click *Graph* at left. Click *Start* to begin taking data.

6. Start at a frequency of 50 Hz and increase until you find the frequency of the largest resonance (indicated by a peak on the sound level graph). This is the fundamental frequency. Record the result here:

7. The resonant frequencies for a tube open at one end are given by $f = nv/4L$ where n is an odd integer, v is the velocity of sound and L is the effective tube length. From the fundamental frequency you just found, calculate the velocity of sound in air (using $n = 1$) and record it here:

Activity 2: Fixed frequency

1. Adjust the tube length to 20 cm.
2. Set the speaker inside the open end of the tube so that it is closed at both ends.
3. Set the sine wave generator frequency to 600 Hz (with low amplitude).
4. Slowly move the inner tube to increase the effective length of the tube. Record the length of the tube when resonance is achieved:

5. Increase the length of the tube until three more resonance lengths are found for the constant frequency and record them here:

6. The maxima you have determined are spaced a distance $\lambda/2$ apart, where λ is the wavelength. Find the differences between adjacent resonance lengths and calculate the average of the three values:

7. Find λ from your average value of $\lambda/2$ and calculate the velocity of sound in air from $v = f\lambda$.

8. The velocity of sound in air at 0°C is 331.4 m/s. The temperature dependence of sound velocity in air is given by $v(T) = 331.4 + 0.6T$, where T is in °C and v is in m/s. Calculate an "accepted" value of the velocity of sound in air from this formula.

9. What is the percent difference between your experimental result and the "accepted" value?

13 Electrostatics

Name _____ Section _____ Date _____

Objective

- To understand the basic phenomena of electric charges at rest.

Introduction

Atoms consist of a central nucleus made up of protons and neutrons surrounded by one or more electrons. While the nuclei of solids are essentially localized, some of the electrons may be free to move about. A substance which has as many electrons as it has protons is said to be electrically neutral. Dissimilar objects have different affinities for electrons. When two such objects, initially neutral, are rubbed together, the friction may cause electrons to pass from one to the other. After separation, neither object is neutral. Each is said to have been "charged by friction". An isolated, electrified object becomes neutral again if its electron-proton balance is restored. A convenient means for accomplishing this is to connect the object to earth by means of a conductor, through which electrons readily travel. This process is called "grounding the body". Since an electrified object is referred to as "charged", grounding is also referred to as "discharging".

Substances through which electrons do not move easily are called "non-conductors", or "insulators". Experiment has shown that when rubber and wool are rubbed together, electrons pass form the wool to the rubber. The electrons remain on the surface of the rubber–a non-conductor–where they were transferred.

Rubbing a metal rod with a wool cloth can also transfer electrons. This rod, however, is a conductor and electrons pass through it to the experimenter and then to the earth. People, made mostly of salt water, are good conductors, as well. Metal that is isolated, however, can be electrified. This can be demonstrated with an electroscope, which has a metal knob connected to a stem from which a thin metal leaf hangs. An insulator prevents contact of these metal parts with the case, and consequently the earth.

Apparatus

- electroscope
- rubber and glass rods
- wool and silk cloth
- plastic rod with metal disk mounted on one end

Activity 1: Charging by Friction

1. Be sure the electroscope is discharged by touching the knob with your finger. Explain what happened and why you are convinced the electroscope is discharged.

2. **Prediction:** If you rub the knob of an electroscope with a wool cloth, what will be the state of the electroscope when you remove the cloth? Explain.

3. Gently and repeatedly rub the knob of the electroscope with the wool cloth for a couple of minutes. Remove the cloth. Note any differences in the electroscope from its appearance before you rubbed.

4. Explain what, if anything, happened.

Activity 2: Charging by Contact

1. Discharge the electroscope as before.
2. Charge the plastic rod by friction with the wool cloth.
3. Does anything occur in the electroscope when you bring the disc close to the knob without touching it?

4. **Prediction:** What will happen to the electroscope if you repeatedly touch its knob with a freshly charged object?

5. Touch the disc to the knob; rub the disc again and again touch it to the knob; repeat this procedure two or three more times. Describe any changes to the electroscope.

6. Repeat the procedure above until the electroscope's leaf is at approximately a twenty degree angle with the stem.

Activity 3: Kinds of Electrification

1. Electrify one end of the rubber rod by wrapping the wool cloth around the rod, squeezing the wool against the rod, twisting the rod vigorously to ensure good contact, and separating the wool from the rod.
2. **Prediction:** What will happen when you bring the electrified end of the rubber rod toward, but not touching, the electroscope's knob? What will happen if you do the same with the wool cloth?

3. Bring the charged end of the rubber rod toward the knob, but do not touch it. Record what happens.

4. Repeat number 3 with the wool cloth.

5. What differences were there between the trial with the rod and the trial with the cloth?

6. How would you account for these differences?

7. **Note:** By definition, the electrical state of the rubber after being rubbed by the wool is negative. That is, an object that has an excess of electrons is said to be negatively charged. Realize that this is only a convention.

8. If the rubber is said to be negatively charged, in what electrical state is the wool cloth?

9. How can an electroscope be used to determine the nature of any charge?

10. Rub the end of the glass rod with the silk cloth and determine the charge of each (positive or negative) after they are separated.

Activity 4: Action of the Electroscope

1. **Discussion:** Two facts explain the rise or fall of the leaves of an electroscope: (a) Like charges repel (unlike charges attract); and (b) Free electrons move about in a conductor when an electric force acts upon them.

2. When the wool cloth approaches the knob (in Activity 3 number 4), which way do the free electrons in the metal of the electroscope move (up toward the knob or down toward the leaf)?

3. In Activity 3, the electroscope was negatively charged before either the rod or the wool was brought toward the knob. For the case of the rod, in which direction do the free electrons in the electroscope move? Does the electron displacement increase or decrease the electrostatic force separating the leaf from the stem?

Activity 5: Charging by Induction

1. Discharge the electroscope.
2. **Prediction:** What will be the effect on the electroscope if you perform the following experiment: while grounding the electroscope with your finger, bring an electrified rubber rod near the knob, then take away your finger and then the rod (in that order)?
3. Carry out the experiment and describe the result.
4. Explain the result and why your prediction agreed or disagreed with it.
5. **Prediction:** Note that no electrons moved between the rod and the electroscope. What charge has been induced on the electroscope?
6. Test your prediction with the negatively charged rubber rod and the positively charged wool.
7. Does the test verify or contradict your prediction?

14 The Electrical and Gravitational Forces[3]

Name _____ Section _____ Date _____

> I began to think of gravity extending to the orb of the moon, and . . . I deduced that the forces which keep the planets in their orbs must be reciprocally as the squares of their distances from the centers about which they revolve: and thereby compared the force requisite to keep the moon in her orb with the force of gravity at the surface of the earth, and found them to answer pretty nearly. All this was in the two plague years of 1665 and 1666, for in those days I was in the prime of my age for invention, and minded mathematics and philosophy more than at any time since. - Isaac Newton

Objective

To understand the similarities of the gravitational and electrical forces.

Overview

The enterprise of physics is concerned ultimately with mathematically describing the fundamental forces of nature. Nature offers us several fundamental forces, which include a strong force that holds the nuclei of atoms together, a weak force that helps us describe certain kinds of radioactive decay in the nucleus, the force of gravity, and the electromagnetic force.

Two kinds of force dominate our everyday reality-the gravitational force acting between masses and the Coulomb force acting between electrical charges. The gravitational force allows us to describe mathematically how objects near the surface of the earth are attracted toward the earth and how the moon revolves around the earth and planets revolve around the sun. The genius of Newton was to realize that objects as diverse as falling apples and revolving planets are both moving under the action of the same gravitational force.

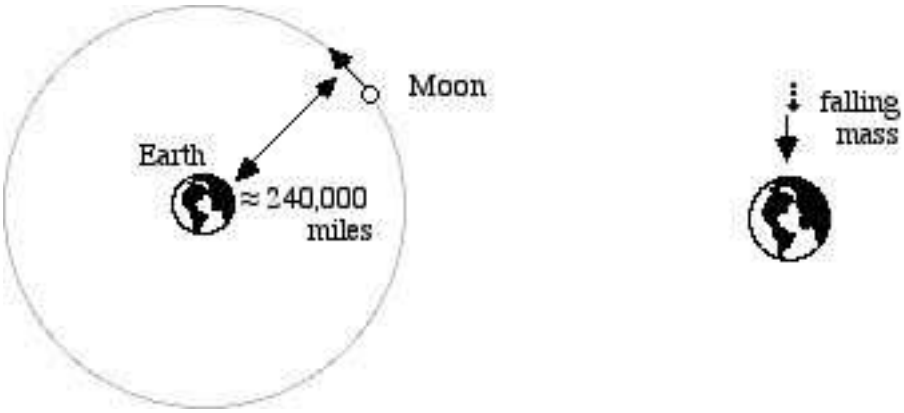

Similarly, the Coulomb force allows us to describe how one charge "falls" toward another or how an electron orbits a proton in a hydrogen atom.

[3] 1990-93 Dept. of Physics and Astronomy, Dickinson College. Supported by FIPSE (U.S. Dept. of Ed.) and NSF. Portions of this material have been modified locally and may not have been classroom tested at Dickinson College.

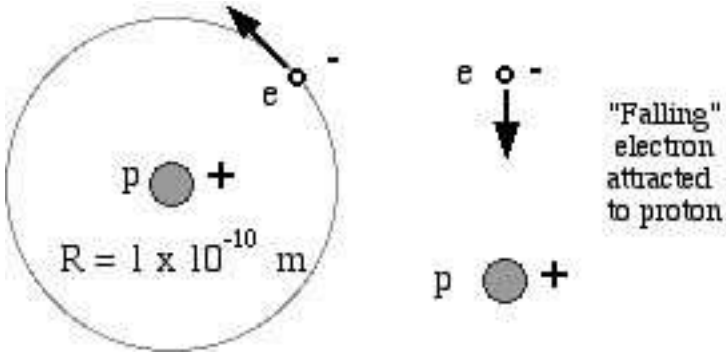

The fact that both the Coulomb and the gravitational forces lead to objects falling and to objects orbiting around each other suggests that these forces might have the same mathematical form.

In this unit we will explore the mathematical symmetry between electrical and gravitational forces for two reasons. First, it is beautiful to behold the unity that nature offers us as we use the same type of mathematics to predict the motion of planets and galaxies, the falling of objects, the flow of electrons in circuits, and the nature of the hydrogen atom and of other chemical elements. Second, what you have already learned about the influence of the gravitational force on a mass can be applied to aid your understanding of the forces on charged particles.

Activity 1: Comparison of Electrical and Gravitational Forces

Let's start our discussion of this comparison with the familiar expression of the Coulomb force exerted on charge 1 by charge 2.

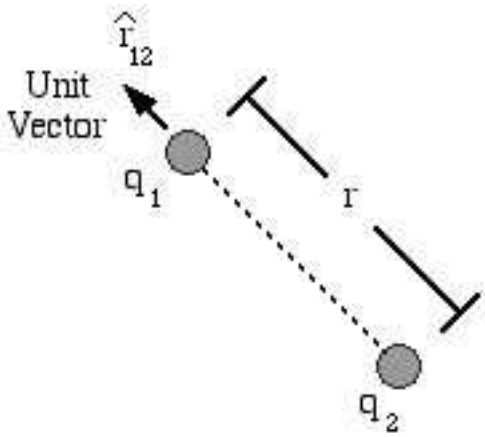

$$\mathbf{F}_{12} = k_e \frac{q_1 q_2}{r^2} \hat{r}_{12}$$

$$k_e = 8.99 \times 10^9 \, \mathrm{N\,m^2/C^2}$$

Charles Coulomb did his experimental investigations of this force in the 18th century by exploring the forces between two small charged spheres. Much later, in the 20th century, Coulomb's law enabled scientists to design cyclotrons and other types of accelerators for moving charged particles in circular orbits at high speeds.

Newton's discovery of the universal law of gravitation came the other way around. He thought about orbits first. This was back in the 17th century, long before Coulomb began his studies. A statement of Newton's universal law of gravitation describing the force experienced by mass 1 due to the presence of mass 2 is shown below in modern mathematical notation:

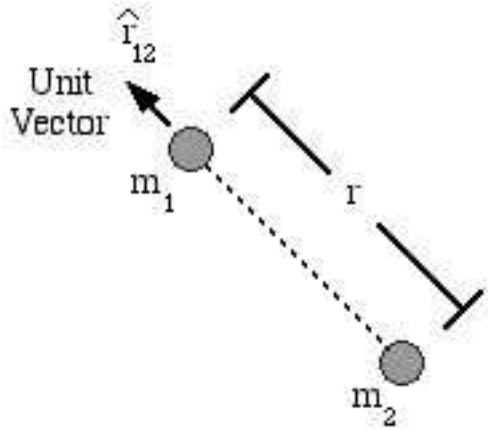

$$\mathbf{F}_{12} = -G \frac{m_1 m_2}{r^2} \hat{r}_{12}$$

$$G = 6.67 \times 10^{-11} \text{ N m}^2/\text{kg}^2$$

About the time that Coulomb did his experiments with electrical charges in the 18th century, one of his contemporaries, Henry Cavendish, did a direct experiment to determine the nature of the gravitational force between two spherical masses in a laboratory. This confirmed Newton's gravitational force law and allowed him to determine the gravitational constant, G. A fact emerges that is quite amazing. Both types of forces, electrical and gravitational, are very similar. Essentially the same mathematics can be used to describe orbital and linear motions due to either electrical or gravitational interactions of the tiniest fundamental particles or the largest galaxies. This statement needs to be qualified a bit when electrons, protons and other fundamental particles are considered. A new field called quantum mechanics was developed in the early part of this century to take into account the wave nature of matter, which we don't actually study in introductory physics. However, even in wave mechanical calculations electrical forces like those shown above are used.

Activity 2: The Electrical vs. the Gravitational Force

Examine the mathematical expression for the two force laws.

(a) What is the same about the two force laws?

(b) What is different? For example, is the force between two like masses attractive or repulsive? How about two like charges? What part of each equation determines whether the like charges or masses are attractive or repulsive?

(c) Do you think negative mass could exist? If there is negative mass, would two negative masses attract or repel?

Which Force is Stronger– Electrical or Gravitational?

Gravitational forces hold the planets in our solar system in orbit and account for the motions of matter in galaxies. Electrical forces serve to hold atoms and molecules together. If we consider two of the most common

fundamental particles, the electron and the proton, how do their electrical and gravitational forces compare with each other?

Let's peek into the hydrogen atom and compare the gravitational force on the electron due to interaction of its mass with that of the proton to the electrical force between the two particles as a result of their charge. In order to do the calculation you'll need to use some well known constants.

Electron: m_e = 9.1 x 10^{-31} kg, q_e = - 1.6 x 10^{-19} C

Proton: m_p = 1.7 x 10^{-27} kg, q_p = +1.6 x 10^{-19} C

Distance between the electron and proton: r = 1.0 x 10^{-10} m

Activity 3: The Electrical vs. the Gravitational Force in the Hydrogen Atom

(a) Calculate the magnitude of the electrical force on the electron. Is it attractive or repulsive?

(b) Calculate the magnitude of the gravitational force on the electron. Is it attractive or repulsive?

(c) Which is larger? By what factor (i.e. what is the ratio)?

(d) Which force are you more aware of on a daily basis? If your answer does not agree with that in part (c), explain why.

Activity 4: The Gravitational Force of the Earth

(a) Use Newton's law to show that the magnitude of the acceleration due to gravity on an object of mass m at a height h above the surface of the earth is given by the following expression:

$$\frac{GM_e}{(R_e + h)^2}$$

Hint: Because of the spherical symmetry of the Earth you can treat the mass of the Earth as if it were all concentrated at a point at the Earth's center.

(b) Calculate the acceleration due to gravity of a mass m at the surface of the earth (h=0). The radius of the earth is $R_e \approx 6.38 \times 10^3$ km and its mass $M_e \approx 5.98 \times 10^{24}$ kg. Does the result look familiar? How is this acceleration related to the gravitational acceleration g?

(c) Use the equation you derived in part (a) to calculate the acceleration due to gravity at the ceiling of the room you are now in. How does it differ from the value at the floor? Can you measure the difference in the lab using the devices available?

(d) Suppose you travel halfway to the moon. What is the new value of the acceleration due to gravity (neglecting the effect of the moon's pull)? (Recall that the earth-moon distance is about 384,000 km.)

(e) Is the gravitational acceleration "constant", g, really a constant? Explain.

(f) In part (d) you showed that there is a significant gravitational attraction halfway between the earth and the moon. Why, then, do astronauts experience weightlessness when they are orbiting a mere 120 km above the earth?

15 Electric Fields and Equipotential Lines

Name _____ Section _____ Date _____

Objective

- To learn the shape of electric fields.

Introduction

Charged objects exert an electrical force on other charged objects in proportion to the amount of charge each has, just as massive objects exert a gravitational force on one another in proportion to their masses. The magnitudes of both forces depend, too, on the distance between objects. However, whereas the gravitational force is always attractive, electrical forces may be either attractive or repulsive depending on the sign of the charges. It is convenient in understanding the nature of electrical forces to draw pictures of them. We represent the fields, which provide the magnitude and direction of the forces, as lines. We agree on a convention: the direction of the field is that of the force on an infinitesimal positive test charge. Thus, the lines of force originate on and come out of positive charges and are directed toward and terminate on negative charges (see figure below). The magnitude of the field, and therefore the force, is proportional to the density of the field lines.

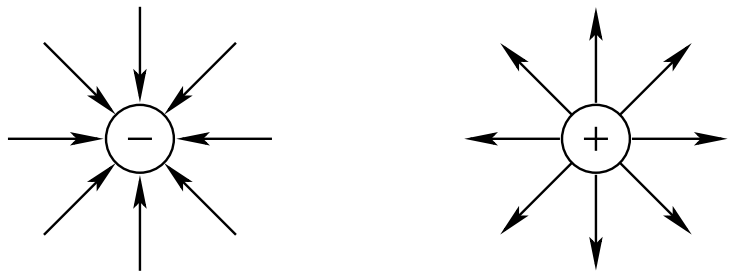

Please note that when the situation is electrostatic, 1) the electric field within a metal is zero, and 2) the electric field just outside the surface of a metal is perpendicular to the surface. If either of these conditions were altered, then there would be an electric current in the metal, which is not an electrostatic situation. Because an electric field exerts a force on a charge, work must be done to move a charged object along any of the field lines. On the other hand, movement perpendicular to the field lines requires no work. Such movement is said to be along an equipotential line.

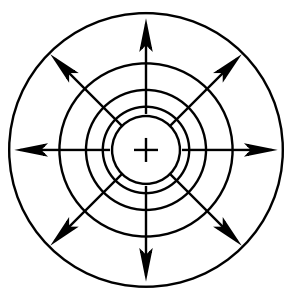

In the figure above, the electric field for a positive point charge is shown as lines with arrows. The regions of equipotential (equipotential lines) are shown with circles. Notice that the equipotential lines are perpendicular to the electric field lines and that the density of equipotential lines is proportional to the electric field strength.

Electric field lines are difficult to measure directly, but potentials can be measured with a voltmeter. An electric field will arise in the space surrounding two separated charged conductors. With one lead of a voltmeter connected to one of the conductors and the other used as a probe, the potentials can be determined (see figure below).

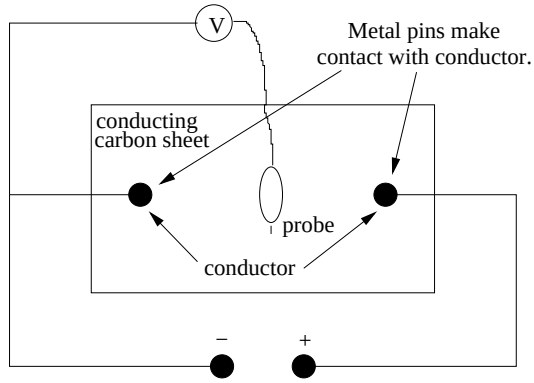

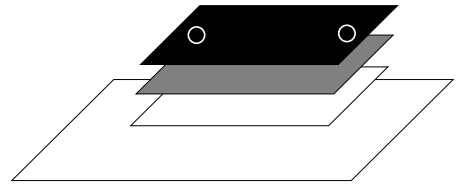

Apparatus

- Power supply
- Voltmeter
- Conducting sheets
- Carbon and white paper
- Wooden board and pins

Activity 1: Field Lines for Two Point Charges

Prediction: Using the rules given in the introduction and given in the first set of figures, draw the electric lines for two oppositely charged point objects. Sketch the equipotential lines.

1. Find the conducting paper with the two silver circles on the front and lay it over a copy carbon and a sheet of paper on top of the wooden board.
2. Connect the positive output of the power supply to one of the circles and the negative to the other.
3. Connect the negative lead of the voltmeter to the negative conductor and use the positive lead as the probe.
4. With the power supply voltage turned on and set to 10 volts, probe lightly with the voltmeter to find a number of points on the carbon paper registering 8 volts. Push down each time you find a point so that marks will be made on the bottom paper.
5. Repeat for 6 volts, 4 volts, and 2 volts.
6. You should end up with a series of dots on your sheet of paper. Connect those associated with the same potential with smooth lines.

7. Recalling the relationship between electric field lines and equipotential lines, sketch in the electric field lines. (*Other group members can sketch copies of the same results.*)
8. Does your experimental result agree with your prediction? Explain.

Activity 2: Field Lines for Parallel Plates

Prediction: Draw what you think the field lines and equipotential lines between parallel plates will look like.

1. Carry out the instructions from Activity 1 to check your prediction.
2. Does your result agree with your prediction? Explain.

Activity 3: Field Lines Between a Point Charge and a Plate

Prediction: Draw what you think the field lines and equipotential lines between a point charge and a parallel plate will look like.

1. Map the field lines as before.
2. Does your result agree with your prediction? Explain.
3. If the potential is zero, must the electric field be zero as well?
4. What can you say about the electric field along an equipotential line?

16 The Electric Potential[4]

Name _____ Section _____ Date _____

Overview

It takes work to lift an object in the earth's gravitational field. Lowering the object releases the energy that was stored as potential energy when it was lifted. Last semester, we applied the term *conservative* to the gravitational force because it "releases" all of the stored energy. We found experimentally that the work required to move a mass in the gravitational field was path independent. This is an important property of any conservative force. Given the mathematical similarity between the Coulomb force and the gravitational force, it should come as no surprise that experiments confirm that an electric field is also conservative. This means that the work needed to move a charge from point A to point B is independent of the path taken between points. A charge could be moved directly between the two points or looped around and the work expended to take either path would be the same. Work done by an electric field on a test charge q traveling between points A and B is given by

$$W = \int_A^B \vec{F} \cdot d\vec{s} = \int_A^B q\vec{E} \cdot d\vec{s}$$

Activity 1: Work Done on a Charge Traveling in a Uniform Electric Field

(a) A charge q travels a distance d from point A to point B; the path is parallel to a uniform electric field of magnitude E. What is the work done by the field on the charge? How does the form of this equation compare to the work done on a mass m traveling a distance d in the almost uniform gravitational field near the surface of the earth?

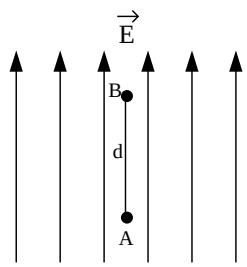

(b) The charge q travels a distance d from point A to point B in a uniform electric field of magnitude E, but this time the path is perpendicular to the field lines. What is the work done by the field on the charge?

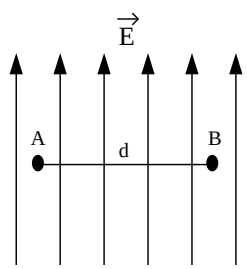

(c) The charge q travels a distance d from point A to point B in a uniform electric field of magnitude E. The path lies at a 45° angle to the field lines. What is the work done by the field on the charge?

[4] 1990-93 Dept. of Physics and Astronomy, Dickinson College. Supported by FIPSE (U.S. Dept. of Ed.) and NSF. Portions of this material may have been modified locally and may not have been classroom tested at Dickinson College.

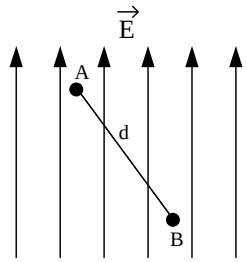

Potential Energy and Potential Difference

Recall that by definition the work done by a conservative force equals the negative of the change in potential energy, so that the change in potential energy of a charge moving from point A to point B under the influence of an electrical force is given by:

$$\Delta U = U_B - U_A = -\int_A^B q\vec{E} \cdot d\vec{s}$$

By analogy to the definition of the electric field, we are interested in defining the *electric potential difference* $\Delta V = V_B - V_A$ as the change in electric potential energy ΔU per unit charge. Formally, *the potential difference is defined as the work per unit charge that an external agent must perform to move a test charge from A to B without changing its kinetic energy.* The potential difference has units of joules per coulomb. Since 1 J/C is defined as one *volt*, the potential difference is often referred to as *voltage*.

Activity 2: The Equation for Potential Difference

Write the equation for potential difference as a function of $\vec{E}$, $d\vec{s}$, A, and B.

The Potential Difference for a Point Charge

The simplest charge configuration that can be used to consider how voltage changes between two points in space is a single point charge. We will start by considering a single point charge and then move on to more complicated configurations of charge.

A point charge q produces an electric field that points radially outward in all directions for a positive charge, radially inward for a negative charge. The line integral equation for the potential difference can be evaluated to find the potential difference between any two points in space A and B (a line integral is one that follows a path through space).

It is common to choose the reference point for the determination of voltage to be set at infinity so that we are determining the work per unit charge that is required to bring a test charge from infinity to a certain point in space. Let's choose a coordinate system so that the point charge is conveniently located at the origin. In this case we will be interested in the potential difference between infinity and some point which is a distance r from the point charge. Thus, we can write the equation for the potential difference, or voltage, as

$$\Delta V = V_B - V_A = V_r - V_\infty = -\int_\infty^r \vec{E} \cdot d\vec{s}$$

Often, when the reference point for the potential difference is at infinity, this difference is simply referred to as "the potential", and the symbol ΔV is just replaced with the symbol V.

Activity 3: Potential at a Distance r from a Charge

Starting from the expression for the electric field of a point charge, show that, if A is at infinity and B is a distance r from a point charge q, then the potential V is given by the expression

$$V = \frac{kq}{r}$$

where $k = \frac{1}{4\pi\varepsilon_o} = 8.99 \text{ x } 10^9 \text{ Nm}^2/\text{ C}^2$.

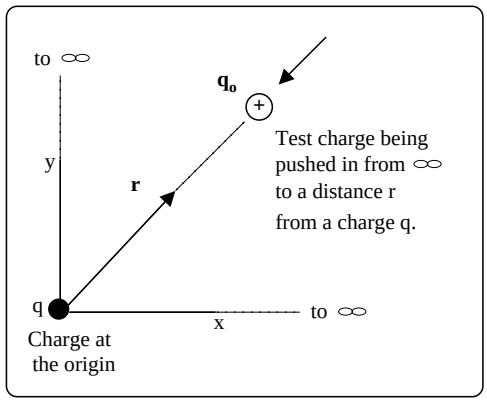

Hint: What is the mathematical expression for an E-field from a point charge?

The Potential Difference Due to Continuous Charge Distributions

The potential from a continuous charge distribution can be calculated several ways. Each method should yield approximately the same result. First, we can use an integral method in which the potential dV from each element of charge dq is integrated mathematically to give a total potential at the location of interest. Second, we can approximate the value of the potential V by summing up several finite elements of charge Δq by using a computer spreadsheet or hand calculations.

Again, let's consider a relatively simple charge distribution. In this case we will look at a ring with charge uniformly distributed on it. We will calculate the potential on the axis passing through the center of the ring as shown in the diagram below. (Later on you could find the potential difference from a disk or a sheet of charge by considering a collection of nested rings).

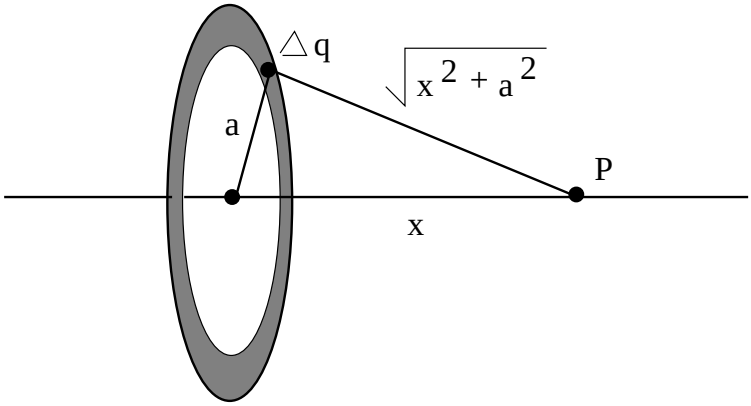

A ring of charge has a total charge of $Q = 20\mu$C (i.e. 20 x 10^{-6} C). The radius of the ring, a, is 30 cm. We want to find the electric field and the electric potential at a distance x from the ring along an axis that is perpendicular to the ring and passes through its center. Let's begin by calculating the potential in the next activity.

Hints: Since the potential is a scalar and not a vector we can calculate the potential at point P (relative to ∞) for each of the charge elements Δq and add them to each other. This looks like a big deal but it is actually a trivial problem because all the charge elements are the same distance from point P.

Activity 4: Numerical Estimate of the Potential from a Charged Ring

(a) Divide the ring into 20 elements, each of charge Δq = 1.0 x 10^{-6} C and calculate the total V at a distance of x = 20 cm from the center of the ring using a spreadsheet program or by hand calculation. Summarize the result below. Be sure to attach a printout of your spreadsheet results.

Activity 5: Calculation of the Potential from a Charged Ring

By following the steps below, you can use an integral to find a more exact value of the potential.

(a) Show that

$$V = k \int \frac{dq}{r} = k \int \frac{dq}{\sqrt{x^2+a^2}}$$

(b) Explain why

$$k \int \frac{dq}{\sqrt{x^2+a^2}} = \frac{k}{\sqrt{x^2+a^2}} \int dq$$

(i.e. explain why $\sqrt{x^2+a^2}$ can be pulled out of the integral).

(c) Perform the integration in part (b) above. Then substitute values for a, x, and Q into the resulting expression in order to obtain a more "exact" value for the potential.

(d) How does the "numerical" value that you obtained in Activity 4 compare with the "exact" value you obtained in (c)?

Now let's take a completely different approach to the same problem. If we can find the vector equation for the electric field at point P due to the ring of charge, then we can use the expression

$$\Delta V = V_r - V_\infty = -\int_\infty^r \vec{E} \cdot d\vec{s}$$

as an alternative way to find a general equation for the potential at point P.

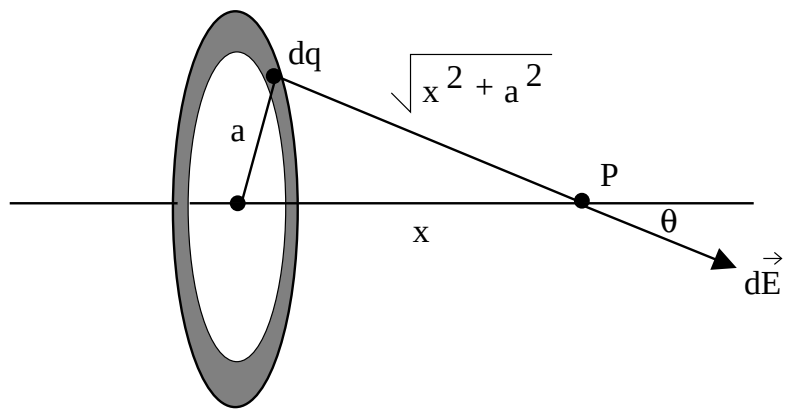

Activity 6: ΔV from a Ring Using the E-field Method

(a) Starting from the electric field of a point charge, show that the electric field at point P from the charged ring is given by

$$\vec{E} = \frac{kqx}{(x^2+a^2)^{3/2}}\hat{x}$$

Hints: (1) Why is there no y component of the E-field? (2) $\cos\theta = \frac{x}{\sqrt{x^2+a^2}}$

(b) To find ΔV use the following equation.

$$\Delta V = V_r - V_\infty = -\int_\infty^r \vec{E} \cdot d\vec{s}$$

Hint: You will probably need to consult the integral tables in the appendix of your text. $\cos\theta = \frac{x}{\sqrt{x^2+a^2}}$

(c) How does the result compare to that obtained in Activity 5 (c)?

Equipotential Surfaces

Sometimes it is possible to move along a surface without doing any work. Thus, it is possible to remain at the same potential energy anywhere along such a surface. If an electric charge can travel along a surface without doing any work, the surface is called an *equipotential surface*.

Consider the three different charge configurations shown below. Where are the equipotential surfaces? What shapes do they have?

Hint: If you have any computer simulations available to you for drawing equipotential lines associated with electrical charges, you may want to check your guesses against the patterns drawn in one or more of the simulations.

Activity 7: Sketches of Electric Field Lines and Equipotentials

(a) Suppose that you are a test charge and you start moving at some distance from the charge below (such as 4 cm). What path could you move along without doing any work, i.e. $\vec{E} \cdot d\vec{s}$ is always zero? What is the shape of the equipotential surface? Remember that in general you can move in *three* dimensions.

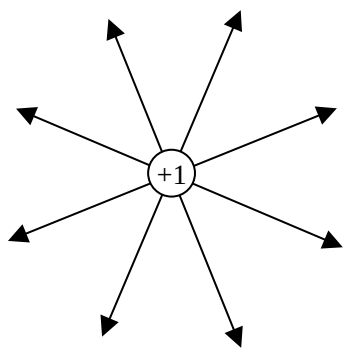

(b) Find some equipotential surfaces for the charge configuration shown below, which consists of two charged metal plates placed parallel to each other. What is the shape of the equipotential surfaces?

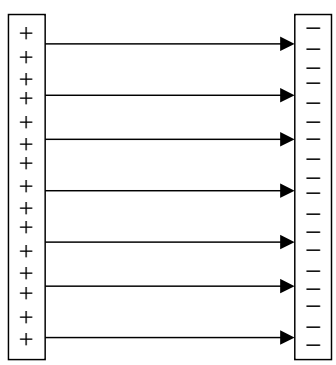

(c) Find some equipotential surfaces for the electric dipole charge configuration shown below.

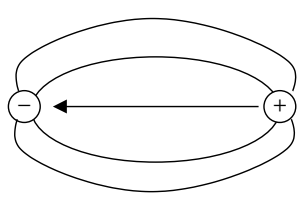

(d) In general, what is the relationship between the direction of the equipotential lines you have drawn (representing that part of the equipotential surface that lies in the plane of the paper) and the direction of the electric field lines?

17 The Electric Field and the Electric Potential I

Name _____ Section _____ Date _____

Objective

- To investigate the electric field and potential of a point charge.

Apparatus

- Electric field and potential simulation entitled *EMField*.

Introduction

The direction of an electric field is the direction of the force on a tiny positive test charge placed in the region of space where the field is to be measured. If the magnitude of this test charge is infinitesimally small, so small that it will not displace or disturb the charges that are the source of the field, we can use the test charge to determine quantitatively the strength of the electric field. The strength of the electric field is taken to be the electric force, F, on the test charge divided by the magnitude of the test charge, q_t: $E = \frac{F}{q_t}$. The force (Coulomb's Law) between two charges, q_1 and q_2, is $F = k\frac{q_1 q_2}{r^2}$, where k= 9 x 10^9 $\mathrm{Nm^2/C^2}$. The units of E are newtons per coulomb, so another way of describing the field strength is to say it is the force experienced by a unit positive test charge.

Recall from a previous laboratory exercise that the potential difference between two points A and B, V_B - V_A, is the work done carrying a unit positive charge from point A to point B. Also, the lines of force (the electric field lines) are always perpendicular to the equipotential lines, lines on which all points are at the same potential. In a static electric field, the electric potential difference between two points is a constant and does not depend on the path used for its computation. The absolute potential, as opposed to the potential difference, is the amount of work done in carrying a unit charge from infinity to point B. The magnitude of the absolute potential, then, is computed as the integral from infinity to the point B of the electric field.

Investigation 1: A Single Charge

Activity 1: The Electric Field

(a) Start the program *EMField* from the *Physics Applications* menu. Click on the screen and you will see a screen with a set of instructions. Go to the **Sources** menu and select **3D Point Charges**. A blank 'table top' with a set of menu buttons at the top and bottom will appear. See Figure 1 below.

(b) Go to the **Display** menu and set *EMField* to **Show Grid** and **Constrain to Grid**. These choices will make the following investigation a bit easier to perform.

(c) Select the charge labeled "+4" from the available set by clicking on it and dragging it to the center of the table top.

(d) **Prediction**: You will take measurements of the field at different distances from the charge. You know the relative size of the charge (+4), but you don't know the size of the charge in coulombs. Generate an expression for the magnitude of the field from an unknown charge with appropriate numerical constants and units. The only unknown in your result should be the charge in coulombs. How does the electric field depend on r, the distance from the point charge?

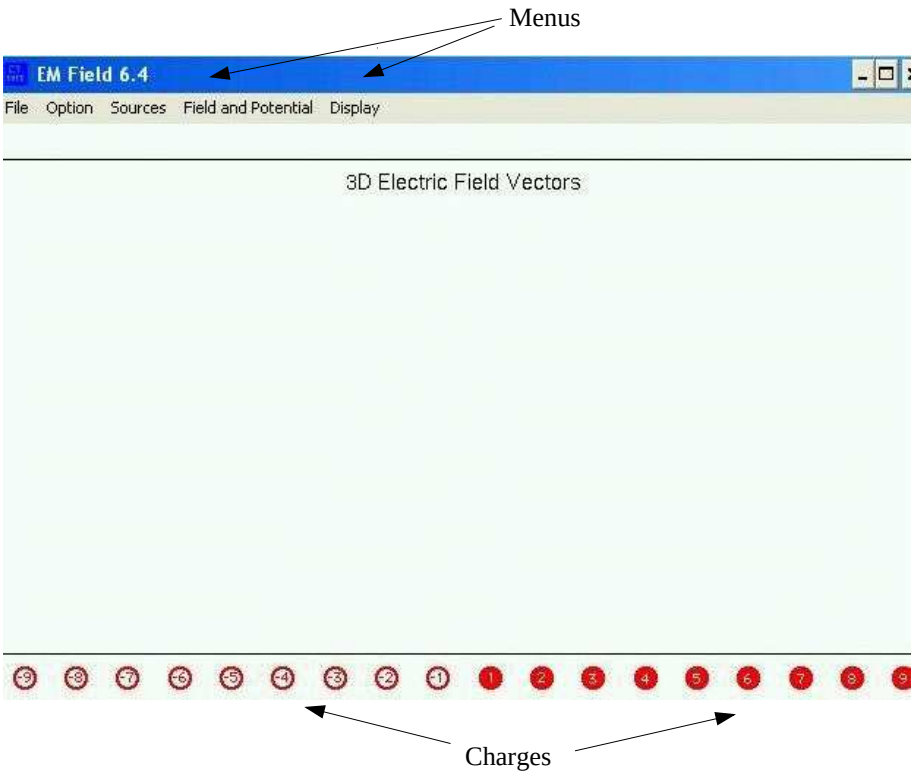

Figure 2: Table top for *EMField*.

(e) Click anywhere in the table top and you will see an arrow drawn. The size and direction of the arrow represent the magnitude and direction of the electric field at that point due to the '+4' charge. In what direction does the arrow point? Click on the opposite side of the table top. In what direction does this arrow point? How is it related to the first arrow?

(f) Click on many points so that you get a wide range of magnitudes from large (barely fits on the table top) to small (barely bigger than a dot).

(g) Print the table top and use a ruler to measure the lengths of each of the arrows on your plot. Enter this data in the table below. Use the scale at the bottom of the table top to convert the length of each arrow into an electric field magnitude. The units of the scale electric field vector are 1.0 N/C.

Distance from Charge (m)	Arrow Length (m)	Measured E (N/C)	Charge (C)

(h) Use the results in column 3 of your table to determine the unknown charge for each electric field measurement and enter the results in the table. Calculate the average and standard deviation of the values of the charge. Are your results consistent? Explain.

(i) Did the measured values agree with your predictions? If they didn't, can you explain why not?

(j) **Prediction**: From Coulomb's Law, we expect the spatial variation of the field strength to obey a power law: $|E| = Ar^n$, where A and n are constants. What do you predict the value of n to be?

(k) Graph field strength as a function of r. Using the power fitting function, determine the power of the function, n, and record it here. Attach the plot to this unit.

(l) Does your result agree with your prediction? Explain any discrepancy.

Activity 2: The Electric Potential

(a) Under the **Display** menu click on **Clean up Screen** to erase the electric field vectors.

(b) **Prediction**: You will now take measurements of the potential. How do you expect the electric potential to change with distance from the point charge?

(c) Click on the **Potential** option under the **Field and Potential** menu. Click on the table top and a marker will be placed at that point and labeled with the value of the potential there. Click on many spots on the table top from very close to the point charge to far away. When you are finished print the table top.

(d) Measure and record in the table the values of the distance from the point charge and the potential.

Distance (m)	Measured V (volts)	Predicted V (volts)

(e) Calculate the value of the electric potential at each of these points from the distance you measured from the point charge and the value of the charge from the previous activity. Fill in the appropriate columns of the table with the distance and predicted potential. Show a sample calculation in the space below.

(f) Did the measured values agree with your calculations? If they didn't, can you explain why not?

(g) **Prediction**: From Coulomb's Law and the definition of the electric potential, we expect the spatial variation of the potential to obey a power law: $\Delta V = Br^m$, where B and m are constants. What do you predict the value of m to be?

(h) Graph the voltage as a function of r. Using the power fitting function, determine the power of the function, m, and record it here.

(i) Does your result agree with your prediction? Explain any discrepancy.

Activity 3: Field Lines and Equipotentials

(a) Under the **Display** menu click on **Clean up Screen** to erase the potential values.

(b) Click on **Field Lines** under the **Field and Potential** menu. Click on many spots on the table top all around the charge to create field lines. Why are they straight lines?

(c) Click on **Directional Arrows** under the **Field and Potential** menu. Click on many spots to create directional arrows for the field lines. (Remember, electric field is a vector quantity.) Why are they directed away from the charge?

(d) Click on **Equipotentials** under the **Field and Potential** menu. Click on many spots to create equipotential lines. Why are they all circular?

(e) What is the relationship between the field lines and the equipotentials at the points where they cross?

18 The Electric Field and the Electric Potential II

Name _____ Section _____ Date _____

Objective

- To investigate the electric field and potential of a charge distribution.

Apparatus

- Electric field and potential simulation entitled *EMField*.

Introduction

In the previous unit (which we will refer to as Investigation 1) we studied the dependence of the electric field and the electric potential on r, the distance from a single charge. Now we will study the same ideas for a different charge distribution.

Investigation 2: Four Symmetrically Arranged Charges

Activity 1: The Electric Field

(a) Start the program *EMField* from the *Physics Applications* menu or (if it's already running) use the options under the **Display** menu to clear the table top and delete any charges. Go to the **Sources** menu and select **3D Point Charges**. A blank 'table top' with a set of menu buttons at the top and bottom will appear (see Figure 1 in Investigation 1, the previous unit).

(b) Go to the **Display** menu and set *EMField* to **Show Grid** and **Constrain to Grid** if they are not already set. These choices will make the following investigation a bit easier to perform.

(c) Under **Sources**, click on **3D Point Charges**. Select the charge labeled "+4" from the available set by clicking on it. Add four individual charges, arranging them symmetrically within about 1 cm of the central point where the "+4" charge was located in Investigation 1 (the previous unit).

(d) **Prediction:** How will the electric field be oriented within the region of the four charges? How will the field be oriented outside the region of the four charges? How will the field depend on r, the distance from the center of the four charges, at large r?

(e) Click on the **Field** option under the **Field and Potential** menu. Click anywhere in the table top and you will see an arrow drawn. The size and direction of the arrow represent the magnitude and direction of the electric field at that point due to the four charges. In what direction does the arrow point? Click on the opposite side of the table top. In what direction does this arrow point? How is it related to the first arrow?

(f) Click on many points so that you get a wide range of magnitudes from large (barely fits on the table top) to small (barely bigger than a dot).

(g) Print the table top and use a ruler to measure the lengths of each of the arrows on your plot. Enter this data in the table below. Use the scale at the bottom of the table top to convert the length of each arrow into an electric field magnitude. The units of the scale electric field vector are 1.0 N/C.

Distance from Charge Center (m)	Arrow Length (m)	Measured E (N/C)

(h) **Prediction**: From Coulomb's Law, we expect the spatial variation of the field strength to obey a power law: $|E| = Ar^n$, where A and n are constants. What do you predict the value of n to be?

(i) Graph your results. Using the power fitting function, determine the power of the function, n, and record it here. Attach the plot to this unit.

(j) Does your result agree with your prediction? Explain any discrepancy.

Activity 2: The Electric Potential

(a) Under the **Display** menu click on **Clean up Screen** to erase the electric field vectors.

(b) **Prediction**: You will now take measurements of the potential. How do you expect the electric potential to change with distance from the center of the four charges?

(c) Click on the **Potential** option under the **Field and Potential** menu. Click on the table top and a marker will be placed at that point and labeled with the value of the potential there. Click on many spots on the table top from very close to the charges to far away. When you are finished print the table top.

(d) Measure and record in the table below the values of the distance from the point charge and the potential.

Distance (m)	Measured V (volts)

(e) **Prediction**: From Coulomb's Law and the definition of the electric potential, we expect the spatial variation of the potential to obey a power law: $\Delta V = Br^m$, where B and m are constants. What do you predict the value of m to be?

(f) Graph your results. Using the power fitting function, determine the power of the function, m, and record it here.

(g) Does your result agree with your prediction? Explain any discrepancy.

(h) How do your results for the power constants, n and m, of the four symmetrically-arranged charges compare with the power constants you determined in Investigation 1 (the previous unit) for the single point charge?

(i) What can you conclude about the field and potential effects due to a distribution of charge outside the region of the distribution (in relation to a single point charge)?

19 The Electric Field and the Electric Potential III

Name _____ Section _____ Date _____

Objective

- To investigate the electric field and potential of an electric dipole.

Apparatus

- Electric field and potential simulation entitled *EMField*.

Introduction

In the previous units (which we will refer to as Investigation 1 and 2) we studied the dependence of the electric field and the electric potential on r, the distance from a charge distribution. Now we will study the same ideas for a charge distribution commonly found in physics and chemistry using the same methods we used before.

Investigation 3: An Electric Dipole

Activity 1: The Electric Field

(a) Start the program *EMField* from the *Physics Applications* menu or use the options under the **Display** menu to clear the table top and delete any charges. Go to the **Sources** menu and select **3D Point Charges**. A blank 'table top' with a set of menu buttons at the top and bottom will appear.

(b) Go to the **Display** menu and set *EMField* to **Show Grid** and **Constrain to Grid** if they are not already set. These choices will make the following investigation a bit easier to perform.

(c) Clear the table top and build an electric dipole by placing two magnitude "4" charges of opposite sign a distance 2 cm apart near the left side of the table top.

(d) **Prediction** How will the electric field be oriented between the two charges? How will the field be oriented outside the region of the two charges? How will the field depend on r, the distance from the midpoint of a line joining the two charges, at large r?

(e) Click on the **Field** option under the **Field and Potential** menu. Click along a line perpendicular to the midpoint of a line joining the two charges. The size and direction of the arrow represent the magnitude and direction of the electric field at that point due to the dipole. In what direction does the arrow point?

(f) Click on many points along the same line so that you get a wide range of magnitudes from large (barely fits on the table top) to small (barely bigger than a dot).

(g) Print the table top and use a ruler to measure the lengths of each of the arrows on your plot and the distance from the midpoint of a line joining the two charges. Enter this data in the table below. Use the scale at the bottom of the table top to convert the length of each arrow into an electric field magnitude. The units of the scale electric field vector are 1.0 N/C.

Distance from Charge Center (m)	Arrow Length (m)	Measured E (N/C)

(h) **Prediction**: From Coulomb's Law, we expect the spatial variation of the field strength to obey a power law: $|E| = Ar^r$, where A and n are constants. What do you predict the value of n to be?

(i) Graph your results. Using the power fitting function, determine the power of the function, n, and record it here. Attach the plot to this unit.

(j) Does your result agree with your prediction? Explain any discrepancy.

(k) How do your results compare with the power law constants you found in Investigations 1 and 2? Explain.

Activity 2: The Electric Potential

(a) Under the **Display** menu click on **Clean up Screen** to erase the electric field vectors.

(b) **Prediction**: You will now take measurements of the potential. How do you expect the electric potential to change with distance from the electric dipole along the line perpendicular to the midpoint of a line joining the two charges?

(c) Click on the **Potential** option under the **Field and Potential** menu. Click on the table top and a marker will be placed at that point and labeled with the value of the potential there. Click on many spots on the table top along the line perpendicular to the midpoint of the line joining the two charges. When you are finished print the table top.

(d) Measure and record in the table the values of the distance from the midpoint of a line joining the two charges and the potential.

Distance (m)	Measured ΔV (volts)

(e) **Prediction**: From Coulomb's Law and the definition of the electric potential, we expect the spatial variation of the potential to obey a power law: $\Delta V = Br^m$, where B and m are constants. What do you predict the value of m to be?

(f) Graph your results. Using the power fitting function, determine the power of the function, m, and record it here.

(g) Does your result agree with your prediction? Explain any discrepancy.

(h) How do your results compare with the power law constants you found in Investigations 1 and 2? Explain.

Activity 3: Equipotential Lines and Field Lines

(a) Under the **Field and Potential** menu, drag down to **Equipotentials**. Click the mouse on the table top and a dotted line will be drawn representing the equipotential line with a label representing the value of the electric potential. [If the curve does not close (i.e., the last point drawn doesn't match up with the starting point), consult the instructor.] Map out the equipotential lines by moving the cursor across the table top away from each charge and clicking the mouse at regular intervals.

(b) What do these curves represent?

(c) Under the **Field and Potential** menu, click on **Field Lines–Auto**. The field lines of the charge distribution will be drawn. [If *EMField* takes a long time to draw one of the field lines, consult your instructor.] Print the result and attach it to this unit.

(d) How are the field lines and the equipotential lines related to one another at the points where they cross?

20 The Electric Field and the Electric Potential IV

Name _____ Section _____ Date _____

Objective

- To investigate the electric fields of atoms.

Apparatus

- Electric field and potential simulation entitled *EMField*.

Investigation 4: An "Atom"

Activity 1: The Electric Field

(a) Start the program *EMField* from the *Physics Applications* menu or use the options under the **Display** menu to clear the table top and delete any charges. Go to the **Sources** menu and select **3D Point Charges**. A blank 'table top' with a set of menu buttons at the top and bottom will appear.

(b) Go to the **Display** menu and set *EMField* to **Show Grid** and **Constrain to Grid** if they are not already set. These choices will make the following investigation a bit easier to perform.

(c) Build an "atom" by symmetrically surrounding a "+36" charge with four (4) "-9" charges. Make the positive "nucleus" by clicking and dragging a "+9" charge to the same spot four times.

(d) **Prediction** How will the electric field be oriented inside the atom? How will the field be oriented outside the atom? How will the field depend on r, the distance from the nucleus of the atom at large r?

(e) Click on the **Field** option under the **Field and Potential** menu. Next, click along a line to the right of the positive charge. What direction does the arrow point?

(f) Click on many points on the table top so that you get a wide range of magnitudes from large (barely fits on the table top) to small (barely bigger than a dot).

(g) Print the table top and use a ruler to measure the lengths of each of the arrows on your plot and the distance from the positive nucleus. Enter this data in the table below. Use the scale at the bottom of the table top to convert the length of each arrow into an electric field magnitude. The units of the scale electric field vector are 1.0 N/C.

Distance from Charge Center (m)	Arrow Length (m)	Measured E (N/C)

(h) **Prediction**: From Coulomb's Law, we expect the spatial variation of the field strength to obey a power law: $|E| = Ar^n$, where A and n are constants. What do you predict the value of n to be?

(i) Graph your results. Using the power fitting function, determine the power of the function, n, and record it here. Attach the plot to this unit.

(j) Does your result agree with your prediction? Explain any discrepancy.

(k) How do your results compare with the power law constants you found in Investigation 3 for the electric dipole? Explain.

(l) How do your results compare with the power law constants you found in Investigations 1-2 for the positive charge distributions? Explain.

Activity 2: The Electric Potential

(a) Under the **Display** menu click on **Clean up Screen** to erase the electric field vectors.

(b) **Prediction**: You will now take measurements of the potential. How do you expect the electric potential to change with distance from the positive nucleus?

(c) Click on the **Potential** option under the **Field and Potential** menu. Click on the table top and a marker will be placed at that point and labeled with the value of the potential there. Click on many spots on the table top along the line to the right of the positive charge. When you are finished print the table top.

(d) Measure and record in the table the values of the distance from the positive charge and the potential.

Distance (m)	Measured ΔV (volts)

(e) **Prediction**: From Coulomb's Law and the definition of the electric potential, we expect the spatial variation of the potential to obey a power law: $\Delta V = Br^m$, where B and m are constants. What do you predict the value of m to be?

(f) Graph your results. Using the power fitting function, determine the power of the function, m, and record it here.

(g) Does your result agree with your prediction? Explain any discrepancy.

(h) How do your results compare with the power law constants you found in Investigation 3 for the electric dipole? Explain.

(i) How do your results compare with the power law constants you found in Investigations 1-2 for the positive charge distributions? Explain.

(j) Atoms, and therefore molecules, are composed of equal numbers of positive and negative charges (protons and electrons), each with its own electric field. In many circumstances, we can treat the whole atom as a neutral particle with no electric field (recall, for example, our treatment of ideal gas particles). How do the electric fields of different charges "cancel" out to reduce the magnitude of the electric field?

21 The Electric Field of the Atomic Nucleus

Name _____ Section _____ Date _____

Introduction

In this exercise you will make a theoretical investigation of the electric field associated with the atomic nucleus. Our current understanding of the nucleus is the product of scattering experiments where a projectile (e.g. an electron, photon, or even another nucleus) is given an initial kinetic energy and collides with a target nucleus (see figure below).

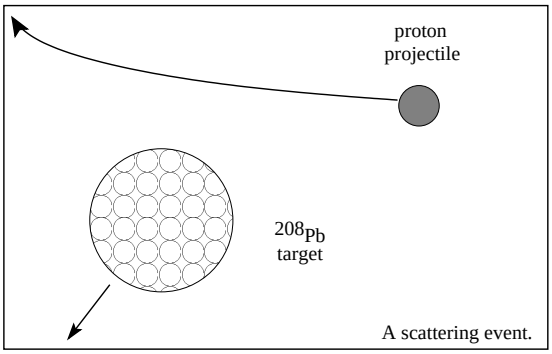

The final energies and velocities of the products of the reaction are then measured and the nature of the interaction is inferred. There are several important features of the nucleus that can be learned from these experiments:

1. The nucleus is small, about 100,000 times smaller than the atom itself.
2. Most of the matter and all of the positive charge is located in this tiny object.
3. There exists a force, called the strong force, that is attractive, acts only within the volume of the nucleus, and is powerful enough to overcome the repulsion between the positive charges concentrated in the nucleus.

Below you will calculate the electric field of the ^{208}Pb nucleus and the force between an incident proton and ^{208}Pb. You will also calculate the work necessary to penetrate the nucleus.

Activity 1: The Electric Field of ^{208}Pb

(a) From scattering experiments like those described above one finds that the positive charge of ^{208}Pb is uniformly distributed throughout the volume of the nucleus, which can be treated as a sphere of radius 7.11 x 10^{-15} m or in units common to nuclear physics, 7.11 fm, where "fm" is known as a fermi. Calculate the total charge, Q, of the ^{208}Pb nucleus.

(b) Calculate the volume charge density, ρ, of the ^{208}Pb nucleus.

(c) Starting with Gauss' Law, generate an expression for the electric field, **E**, outside of the ^{208}Pb nucleus as a function of r, the distance from the center of the sphere. Show and explain each step of the calculation.

(d) Use Gauss' Law to find an expression for **E** inside the nucleus as a function of r. Show and explain each step of the calculation.

(e) Construct a data table with the column headings r (fm), E (N/C), and F (N) in the space below. Then use the expressions you derived above to calculate the electric field for at least ten radial positions between 0 and 20 fm and enter the results in the table. Include 7.11 fm as one of your radial positions.

Activity 2: The force on a Proton

(a) Consider a head-on collision between a proton and the ^{208}Pb nucleus. Generate an expression for the force on the proton as a function of r outside the lead nucleus.

(b) Calculate an expression for the force on the proton as a function of r inside the lead nucleus.

(c) Use these expressions to calculate the force at the same radial positions where you calculated E and enter the results in the table.

(d) Graph F (y axis) vs. r and attach a copy to this unit.

Activity 3: The Work Done by the Field

(a) Recall that the work done by a force is $W = \int_{r_i}^{r_f} \overrightarrow{F} \cdot d\overrightarrow{s}$ where r_i and r_f are the initial and final positions of the object in motion. Treat the ^{208}Pb nucleus as a fixed target and calculate the work done by the Coulomb force on the proton if the proton approaches from infinity and reaches the surface of the lead nucleus. Show all work.

(b) We know that the nuclear force binds particles like neutrons and protons together once they enter the nucleus. From the graph of the force as a function of position, what is the minimum strength of the nuclear force in ^{208}Pb that will bind the proton in the nucleus? Clearly state your reasoning.

(c) Consider a proton that has just enough initial kinetic energy to move from infinitely far away and just reach the surface of the lead nucleus. How is the initial kinetic energy related to the work done by the field?

(d) How would the trajectory of the proton be affected if the kinetic energy is less?

(e) How would the trajectory of the proton be affected if the kinetic energy is greater?

(f) What minimum kinetic energy is needed for a proton to probe the nucleus? Explain.

22 The Charge Distribution of the H_2O Molecule

Name _____ Section _____ Date _____

Introduction

In this exercise you will make a theoretical investigation of the charge distribution within a water molecule (H_2O). The molecule is electrically neutral and is made of 10 positive electric charges and 10 negative electric charges (8 protons and electrons from the oxygen atom and 1 proton and electron from each of the two hydrogen atoms). Despite the net electrical neutrality of the molecule it can produce an electric field if the positive and negative charges within it have different configurations. If the most probable position of the positive charges in the molecule does not coincide with the most probable position of the negative charges as shown in Figure 1a, then we call that configuration an electric dipole. Another candidate for the charge distribution of H_2O is shown in Figure 1b and is called an electric quadrupole. The most probable position of the positive charge is either above or below the x-axis while the negative charge is most likely to be found at the origin. This 'probabilistic' view of the location of the charges is the basis of quantum mechanics, the theory describing the subatomic world. Below you will calculate the electric potential for these two charge distributions and you will use your results to find the electric field for the dipole and quadrupole. You will then consider the design of an experiment to distinguish between the two different charge distributions.

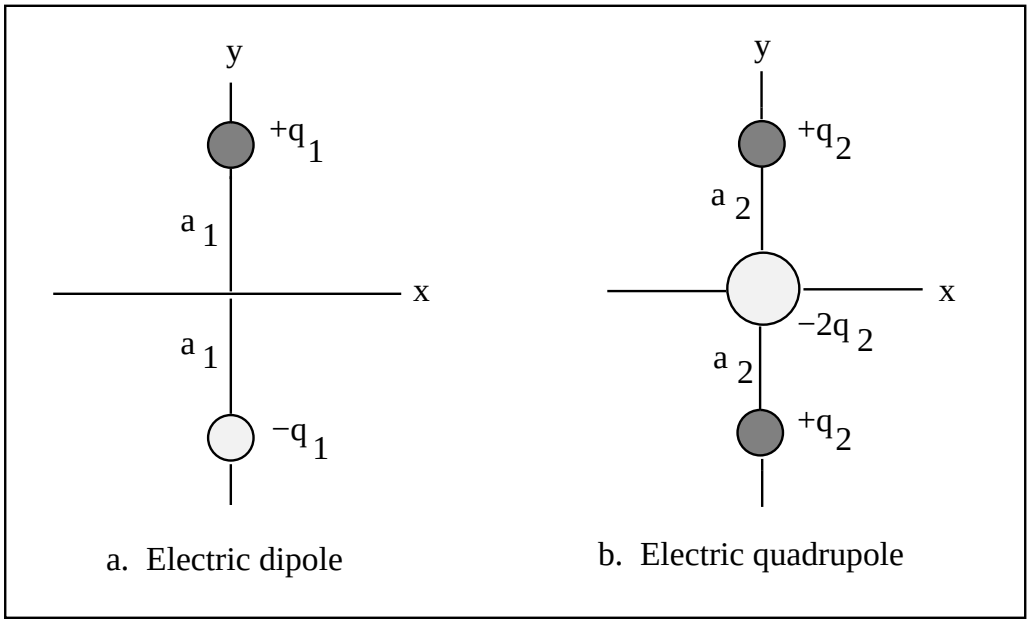

Activity 1: The Electric Dipole

(a) Calculate the electric potential, V, for the electric dipole for a point along the y-axis, but at a position $|y|>$ a_1. Your final expression should depend on the position, y, the charge, q_1, and the most probable location of the charges, a_1.

(b) Generate an expression for the potential energy, U, of the charge distribution when another charge, q_{test}, placed somewhere on the y-axis with $|y| >$ a_1.

(c) Recall the component of the force on a particle is related to the potential energy of the particle by $F_y = -\frac{dU}{dy}$. Calculate the force on the test charge in terms of the position on the y-axis, the charges, and a_1.

(d) Make the approximation that the test charge is far from the molecule, i.e., $|y| \gg a_1$, to generate a new expression for the force.

Activity 2: The Electric Quadrupole

(a) Calculate the electric potential, V, for the electric quadrupole for a point along the y-axis, but at a position $|y| > a_2$. Your final expression should depend on the position, y, the charge, q_2, and the most probable location of the charges, a_2.

(b) Generate an expression for the potential energy, U, of the charge distribution when another charge, q_{test}, is placed somewhere on the y-axis with $|y| > a_2$.

(c) Calculate the force on the test charge in terms of the position on the y-axis, the charges, and a_2.

(d) Make the approximation that the test charge is far from the molecule, i.e., $|y| \gg a_2$, to generate a new expression for the force.

Activity 3: Distinguishing Between the Two Different Charge Distributions

(a) Construct a table in the space below with column headings y(angstroms), Dipole Force (arbitrary units), and Quadrupole Force (arbitrary units). The units of distance known as angstroms are commonly used in atomic physics. One angstrom is equal to 10^{-10} m.

(b) To calculate the force on the test charge one must know the charges and their positions for each charge distribution (q_1, q_2, a_1, a_2). These quantities are unknown to us at this point. However, we want to compare the behavior of the force due to each as a possible probe of the molecule's charge distribution. In the expressions you generated in step (d) of Activities 1 and 2 for $|y| \gg a_1$ or $|y| \gg a_2$ the forces depend on some power of y. For *convenience*, set the constant in front of this power of y to unity. Calculate the forces for the dipole and quadrupole at distances between 1.5 angstroms and 5.0 angstroms in 0.5 angstrom steps. Enter your results in the table.

(c) Make a graph of the force due to the dipole and due to the quadrupole as a function of y. Insert a copy of the graph into your notebook.

(d) In many experiments constants like those in your expressions for the force on the test charge are unknown or poorly known. Suppose, however, that you are able to accurately measure the radial dependence of the force on q_{test} at distances far from the H_2O molecule. If that is the case use the results from steps (b) and (c) to propose a technique to distinguish between the two candidates for the charge distribution of H_2O. Support your proposal with a mathematical argument. (Hint: Consider a ratio involving the measured force.)

(e) Experiment has found that water behaves as an electric dipole with the electric dipole moment, $q_1 a_1$, measured to be 6.2 x 10^{-30} C-m. If the charge that creates the dipole, q_1, is the charge associated with the protons and electrons of the molecule calculate the separation of the charges, a_1. How does it compare with the size of the H_2O molecule of about 1.0 angstroms?

23 Ohm's Law

Name _____ Section _____ Date _____

Objectives

- To investigate the most important principle in electronics.
- To determine how resistors in series and parallel add.

Introduction

The rate at which electric charge flows through a conductor is called the electric current. In order to have a current, a potential difference, or voltage is necessary. We first want to determine the relationship between the potential difference at two ends of a conductor and the current flowing through it.

Note: Do not turn on a power supply until you are sure your circuit is correct. If you are at all unsure, please ask your instructor to approve your setup. Ammeters can be instantly and permanently ruined by an improper connection. Be sure to turn off the power supply before making any changes to the circuit.

Apparatus

- power supply
- 2 rheostats
- ammeter
- voltmeter

Activity 1: Ohm's Law

- Connect two rheostats (or variable resistors) in series as shown in the figure below. Set R_1 at about the halfway point and R_2 at the maximum. Connect an ammeter as shown. Also, connect a voltmeter across (that is, connect a probe to each side of) R_1.

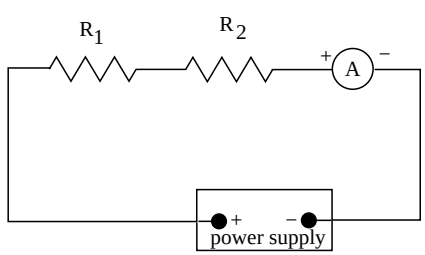

- When sure of your circuit, turn on the power supply, and turn the voltage up all the way..
- Record the current through the circuit and the voltage across R_1.

- Reduce the resistance of R_2 and record the current and voltage three more times by turning down the rheostat in approximately equal steps so that for the last time R_2 is turned completely down.

- Turn off the power supply.
- Plot your four pairs of readings with the voltage on the vertical axis and the current on the horizontal axis.
- Fit a straight line to the points, using the origin as a fifth point.
- Is a straight line a good fit to the data? What does that say about the relationship between voltage and current?

- What are the value and meaning of the slope of this line? Write the equation of the line.

- Remove R_1 from the rest of the circuit and use the ohmmeter option on the multimeter to measure the resistance of R_1. Does it agree with the slope you found? What is the percent difference? Replace R_1.

- What is the general relationship between voltage, current, and resistance? This is Ohm's Law.

- Why is the origin a legitimate point on the curve?

Activity 2: Resistors in Series

- Turn rheostat R_2 to its maximum setting. Connect the multimeter across this resistor, being sure to set it for reading voltages.
- When you are sure the circuit is set, turn on the power supply and record the current and voltage. Turn off the power supply.

- **Prediction**: Based on your measurements, predict the resistance of R_2.

- Remove and measure the resistance of R_2. Record the percent difference between your prediction and measurement. Replace R_2.

- Was the current this time different from the first reading in Activity 1?

- What can you conclude about the current through two resistors in series?

- Connect the multimeter across both resistors, being sure to switch to voltage readout.
- When you are sure the circuit is correct, turn on the power supply and record the current and voltage. Turn off the power supply.

- Has the current changed?

- Has your previous conclusion been substantiated or refuted?

- How is the voltage just measured related to the first voltage measurements in Activities 1 and 2?

- What can you conclude about the voltage across resistors in series?

- Using your conclusions concerning voltages across and current through resistors in series and your formulation of Ohm's law, what can you conclude about the total resistance in a circuit having two resistors in series?

Activity 3: Resistors in Parallel

- Connect the two rheostats in parallel as shown in figure **a** below, with the ammeter at the point marked A and the voltmeter across the two rheostats. Set the rheostats at about their halfway settings.

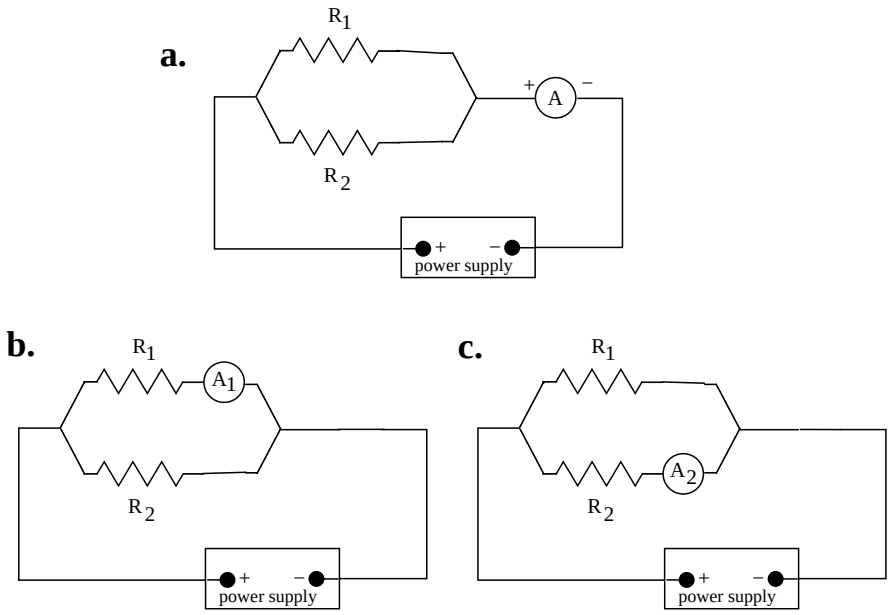

- When you are sure the circuit is set up correctly, turn on the power supply and record the total current through the circuit and the voltage drop across the parallel resistance combination. Turn off the power supply.

- Connect the ammeter to the point marked A_1 in figure **b** above, without disturbing the rest of the circuit; apply power and record the current through R_1 and the voltage reading. Turn off the power supply.

- Repeat the above measurements for R_2, connecting the ammeter at A_2 as in figure **c** above.

- Using Ohm's Law, calculate the two resistances of the parallel connection and also the total resistance of the circuit. Check with the ohmmeter and determine the percent differences.

- What is the relationship between the total current and the current in each of the branches of the parallel circuit?

- What is the relationship between the total resistance of the parallel circuit and the resistance of each of the branches (you may want to look up in a reference what the correct relationship should be and see if your result agrees with it)?

- Determine, using Ohm's law, what the voltage was in each branch of the parallel circuit. Did it make any difference that you didn't reposition the voltmeter during this activity? On the basis of Ohm's law, does the result make sense?

- Can the total resistance of a series combination ever be less than the resistance of the largest resistor? Explain.

- Can the total resistance of a parallel combination ever be greater than the resistance of the smallest resistor? Explain.

24 Kirchhoff's Rules

Name _____ Section _____ Date _____

Objective

- To study Kirchhoff's rules for analyzing circuits.

Introduction

Two statements comprise Kirchhoff's rules. The first, the so-called junction rule, restates the conservation of charge; the second, the so-called loop rule, restates the conservation of energy:

1. The sum of the currents entering any junction (or node) must equal the sum of the currents leaving that junction.
2. The algebraic sum of electrical potential changes across all the elements around any closed loop must be zero.

Note: Do not turn on a power supply until you are sure your circuit is correct. Please ask your instructor to approve your setup. Ammeters can be instantly and permanently ruined by an improper connection. Be sure to turn off the power supply before making any changes to the circuit.

Apparatus

- power supply
- three-resistor board
- analog ammeter
- digital voltmeter

Activity

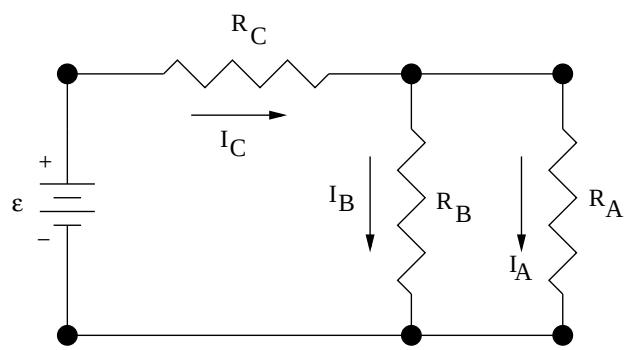

1. Referring to the circuit above, choose a junction and write an equation which satisfies Kirchhoff's first rule.

2. Identify two closed loops on the circuit which contain at least one element not included in the other. Write an equation for each loop that satisfies Kirchhoff's second rule.

3. You now have three equations that can be solved for the three currents in terms of the supplied voltage (emf), ε, and the three resistors, R_A, R_B, and R_C. Carry out the algebra to obtain expressions for the three currents in terms of these quantities.

4. Now use Ohm's law and the sum rules for resistors in series and in parallel to derive expressions for the three currents.

5. Are the results of 3 and 4 the same? They should be.

6. Set a digital multimeter to measure resistance. Determine and record values for the three resistors, R_A, R_B, and R_C, which are mounted on the wooden block.

7. **Prediction**: if the emf, ε, were 5.0 V, what do you predict the three currents would be?

8. Configure the circuit as in the figure above, using the power supply as the source of emf. With the power supply off, set the current control at mid-range and the voltage control all the way down. Set the digital multimeter to measure voltage and connect it in parallel with the power supply to measure ε. Connect the analog ammeter in series with resister R_A to measure the current I_A.

9. After checking with your instructor that the circuit is correct, turn on the power supply and set ε to about 5.0 V. Record ε and I_A, then turn off the power supply.

10. Set up the circuit to measure I_B. After getting assurance from you instructor that your circuit is correct, turn on the power supply and record ε and I_B. Turn off the power supply.

11. Set up, measure and record I_C.

12. Do your results agree with your prediction? How large, in terms of percentage, are the discrepancies? Speculate on what might cause any differences.

25 Capacitance Series Circuit

Name _____ Section _____ Date _____

Objective

- To investigate the relationship among charge, potential difference, and capacitance in a series combination of capacitors.

Introduction

In class the series combination of capacitors was studied with the assumption of a constant potential difference energizing the circuit. In practice this is difficult to reproduce in the lab because capacitors typically do not maintain a steady charge for very long. To get around this we will energize the circuit with an alternating potential difference provided by a sine wave generator. The relationships among Q, V, and C are still the same, so we can study these circuits in the lab.

For a series combination of capacitors, the total voltage across the circuit is the sum of the voltages across the individual capacitors, that is

$$V = V_1 + V_2 + V_3$$

The equivalent capacitance of the combination is given by

$$\frac{1}{C} = \frac{1}{C_1} + \frac{1}{C_2} + \frac{1}{C_3}$$

Apparatus

- Sine wave generator
- Capacitors of 1.0, 4.7, and 10 μf
- Digital multimeter
- Connecting leads

Activity

1. Connect the three capacitors in series with the sine wave generator.
2. Set the sine wave generator to 200 Hz (not critical) and adjust the amplitude so that the output measures 5 to 6 volts as measured with the digital multimeter set for <u>AC volts</u>.
3. Using the multimeter, measure V for the sine wave generator and also for each of the individual capacitors (all with uncertainties) and list them here.

4. Calculate the total voltage and its uncertainty from the first equation above and compare with your measured value. Do they agree?

5. Assuming 10 percent uncertainties on each of the capacitances, calculate the equivalent capacitance and its uncertainty from the second equation above.

6. Calculate the total charge for the circuit (and its uncertainty) from $Q = CV$.

7. **Prediction:** How will the charge on the individual capacitors compare with the total charge calculated above?

8. Calculate the charge on each capacitor and compare with the total. Do the results agree with your prediction?

26 RC Circuits

Name _____ Section _____ Date _____

Objective

- To investigate the behavior of a series RC circuit, i.e. one containing a resistor and a capacitor in series with a DC power supply of fixed emf V_0.

Introduction

For the charging circuit, the charge on the capacitor as a function of time is given by

$$Q(t) = CV_0\left(1 - e^{-t/RC}\right) \tag{1}$$

while for the discharging circuit (no emf) the charge is

$$Q(t) = Q_0 e^{-t/RC} \tag{2}$$

where Q_0 is the initial charge on the capacitor. Since $Q = CV$ for the capacitor, the voltage across the capacitor has the same time dependence, namely

$$V(t) = V_0\left(1 - e^{-t/RC}\right) \tag{3}$$

for the charging circuit and

$$V(t) = V_0 e^{-t/RC} \tag{4}$$

for the discharging circuit.

We will use the discharging circuit in this experiment. For this circuit, the time required for Q (or V) to decrease to $1/e$ of its initial value (the time constant) is

$$\tau = RC \tag{5}$$

The time required for Q (or V) to decrease to $1/2$ of its initial value (the half-life) is

$$t_{1/2} = RCln2 = .693\tau \tag{6}$$

This will be useful because in practice it is easier to measure the half-life than the time constant.

Apparatus

- DC power supply (low voltage)
- Electrolytic capacitor (1000-5000 μf)
- Voltmeter (0-3V)
- Stop watch
- Connecting leads

Activity 1: Proof of Equation (6)

Prove equation (6) above, beginning with equation (2).

Activity 2: Measurement of Half-life

The capacitor will be charged briefly, then allowed to discharge through the voltmeter which will act as the resistor in this case. The internal resistance of the voltmeter (0-3V) is about 3000 ohms. Assume this is known to within 10% and the capacitance as marked is known to within 10%.

1. Connect the voltmeter directly across the capacitor. Electrolytic capacitors are polarity sensitive, so be sure the terminal marked with a minus sign is connected to the negative terminal of the voltmeter.
2. Set the power supply to about 2.5 volts and connect its negative terminal to the negative terminal of the capacitor.
3. Connect the positive terminal of the power supply to the corresponding terminal of the capacitor to charge it, then disconnect the supply and observe the exponential decay of the voltage. Use a stop watch to measure the half-life (5 trials) as follows: switch the stop watch on when the voltmeter reads 2.0 volts, and switch it off when the meter reads 1.0 volt. Record your five measurements here.

Activity 3: Determination of Time Constant

1. Find the average of your five measurements and its uncertainty (the standard deviation) and determine the time constant from equation (6) above, and its uncertainty.

2. Calculate the time constant and its uncertainty from equation (5). Do your two results agree within experimental uncertainties?

27 Magnetism I

Name _____ Section _____ Date _____

Objectives

- To investigate the characteristics of magnets.
- To understand how a compass works.

Introduction

The electric interaction, you probably know, is not the only one in which opposites attract and likes repel. Magnetic interactions have similar characteristics. All simple magnets, regardless of size, are bipolar: there are two magnetic poles. Consider this question, then: Can we talk about like and unlike as we do for electricity?

Apparatus

- 2 bar magnets
- 2 cylindrical magnets
- rods and clamps
- wool cloth
- rubber rod
- string

Activity 1: The Characteristics of Magnets

1. Feel the attraction between two magnets when pulled apart after having come together without effort on your part. Describe qualitatively in terms of strength and separation.

2. Feel the repulsion when one of them is turned around and pushed toward the other. Describe as in step 1.

3. Note and describe the difference in (strength and direction of) interactions between the ends and the middle.

Activity 2: How a Compass Works

1. Identify geographic north and south.
2. Hang one of the cylindrical magnets horizontally from a horizontal rod.

3. When it comes to rest, along which geographical line does the magnet lie?

4. Which end (colored or uncolored) is the "north-seeking" end?

5. Remove the cylindrical magnet and repeat step 2 with the second cylindrical magnet. Answer, again, the questions above.

6. What happens when you bring the "north-seeking" end of the first magnet near the hanging one's north-seeking end?

7. What happens when you bring the first magnet's opposite end near the second's north-seeking end?

8. What about the first magnet's north-seeking end near the opposite end of the hanging one?

9. What happens when you bring the opposite ends near one another?

10. Define in your own words like and unlike poles?

11. What always happens between like poles?

12. What always happens between unlike poles?

13. Determine with a labelled bar magnet which end of your hanging magnet should be identified as the north pole and which the south.

14. Why do we identify one end of a magnet as the north pole and the other as the south?

15. In your own words, explain a compass.

16. In terms of magnetism, what is the earth?

17. Charge a rubber rod with the wool cloth and bring it near the ends of the suspended magnet; describe its effect on the magnet.

18. Does a south magnetic pole repel a negative electric charge?

19. Does a north magnetic pole attract a negative electric charge?

28 Magnetism II

Name _____ Section _____ Date _____

Objective

- To investigate the magnetic field around a permanent magnet.

Introduction

The magnetic field characterizes magnetic forces in much the same way that the electric field characterizes electric forces. At a given point in the region around a magnet, the strength of the field, similar to that of an electric field, is the force per unit north pole (one positive unit of magnetism), and the direction is indicated by the orientation of the north pole of a compass located at the point. On earth, the field mapped out around the magnet is actually the resultant of the field due to the magnet and the field due to the earth.

Apparatus

- 2 bar magnets
- small compass
- white paper and tape

Activity 1: A Single Bar Magnet

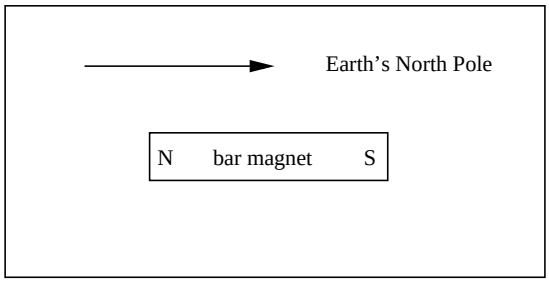

1. Center and tape a bar magnet on a piece of paper and orient it so that the magnet's south pole points to the earth's geographic north pole. Indicate the magnet's polarity and the direction of the earth's field.
2. Place the small compass near the north pole of the magnet and make a dot at each end of the needle using a pencil not encased in metal.
3. Move the compass forward until its south pole points at the previous north pole dot, and make a new dot at the north pole.
4. Repeat 3 until the series of dots reaches the south pole of the magnet or the edge of the paper.
5. In a similar manner, trace enough lines to map the magnetic field over the entire paper. Take points about 0.5 cm apart near the poles and about 2 cm apart near the middle of the magnet.
6. There are two points, called neutral points, near each end of the magnet where the magnet's field and the earth's field are equal and opposite and so cancel. At these points, the compass will align in no particular direction. Try to locate these points by tracing very carefully the lines of force in the neighborhood of the poles.

7. Do lines of force ever cross?

8. Where are the magnetic forces strongest? Weakest? How do the force lines indicate this? Does a line of force represent a constant force along its entire length?

9. Do the lines intersect the magnet at a particular angle (like the electric field lines near a conductor)? What does this imply about the source of a magnetic field as opposed to the surface charge of a conductor as the source of an electric field?

Activity 2: Two Bar Magnets–Unlike Poles Facing One Another

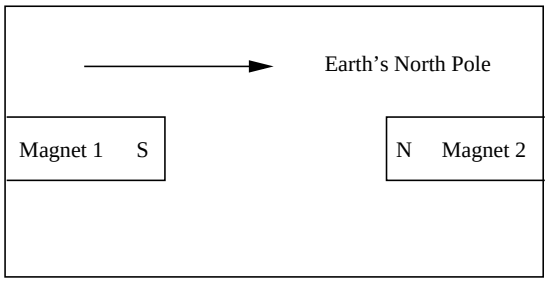

1. Set up two bar magnets on a sheet of paper as shown in the figure above. The magnets should be 8-10 cm apart.
2. Repeat steps 2 through 5 from the previous activity.
3. What sort of charge configuration produces an electric field that looks similar to the magnetic field you just identified?

4. What differences can you recognize?

Activity 3: Two Bar Magnets–Like Poles Facing One Another

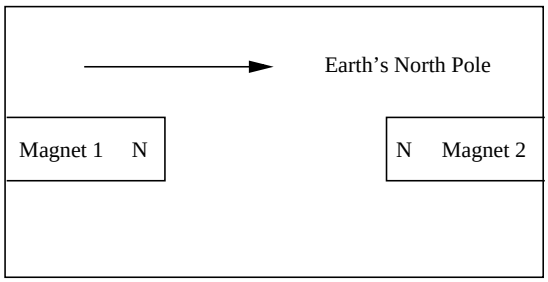

1. Set up two bar magnets on a sheet of paper as shown in the figure above. The magnets should be 8-10 cm apart.
2. Repeat steps 2 through 5 from Activity 1 of this investigation.
3. Try to identify on your map a point at which the magnetic field is zero. Explain what causes this effect.

4. What sort of electric charge configuration would produce a similar field map?

29 Magnetism III

Name _____ Section _____ Date _____

Objectives

To investigate:

- The effect of magnetic fields on moving charges.
- The effect of moving charges (currents) on magnets.

Apparatus

- Bar magnet
- Oscilloscope
- Tangent galvanometer
- Compass
- Power supply

Activity 1: Magnetic Forces on Moving Charges

1. Turn on the oscilloscope by pressing the power button. Turn the TIME/DIV knob completely counter-clockwise. Adjust the INTEN (intensity) and FOCUS knobs so that a small bright spot is formed on the oscilloscope screen by the beam of electrons traveling toward you. Adjust the ILLUM (illumination) knob so that the grid on the screen can be seen clearly. Use the horizontal and vertical POSITION controls to center the spot on the screen.

2. **Note**: An oscilloscope is built around the principle of the cathode ray tube. It emits electrons from its back end. These are accelerated by a series of electrodes and focused to strike a fluorescent screen at its front. The result is a visible trace identifying voltage as a function of time.

3. **Predictions**: What, if anything, will happen to the spot on the screen if the north pole of a magnet is brought near the left side of the oscilloscope? What will happen if you do the same with the south pole? What about when each of the poles are brought near to the top? [Please do not touch the oscilloscope with the magnet.]

4. Bring the N-pole of a horizontal bar magnet near, but not touching, the left side of the oscilloscope case at the height of the spot. Record the direction of any deflection. Repeat with the S-pole.

5. Bring the N-pole of a vertical bar magnet near, but not touching, the top of the oscilloscope case just above the spot. Record the direction of any deflection. Repeat with the S-pole.

6. Turn off the oscilloscope.

7. Did the directions of deflections meet your expectations? Explain.

Activity 2: The Effect of Moving Charges (Currents) on Magnets

In this investigation we will use a device known as a tangent galvanometer to make a qualitative study of the effect of current (moving charges) in a coil of wire on a compass. A sketch of the galvanometer is shown below.

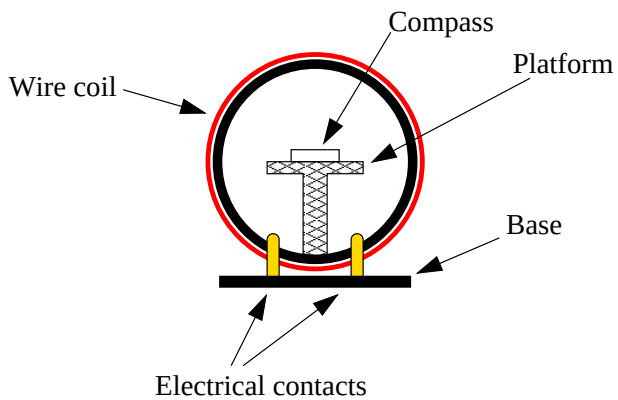

Figure 1. Tangent galvanometer and compass.

1. Connect the positive and negative electrodes on the power supply to the two side screws on the tangent galvanometer.

2. With the power supply off, place the compass on the platform in the center of the tangent galvanometer. Align the compass and the plane of the wire coil of the galvanometer with the contacts of the galvanometer to your right. Turn the power supply on and slowly turn up the voltage. What do you observe? Make a sketch to show the orientation of the compass and tangent galvanometer with the voltage on and off.

3. Turn the voltage on the power supply to zero. Rotate the entire setup (galvanometer, compass, wires) 180° so it faces in the opposite direction with the electric contacts now on your left side. Make sure the plane of the wire coil and the compass are parallel. Slowly turn the voltage back up. What do you observe? Make another sketch to show the orientation of the compass and tangent galvanometer with the voltage on and off.

4. The deflection of the compass when current flows in the tangent galvanometer implies the current creates a magnetic field. From your observations can you tell the direction of the magnetic field? Explain.

5. Reverse the wires on the power supply to reverse the direction of the current in the coil of the tangent galvanometer. We will now repeat the observations from above. With the voltage off, align the compass and the plane of the wire coil of the galvanometer with the contacts of the galvanometer to your right. Slowly turn up the voltage. What do you observe? Make a sketch to show the orientation of the compass and tangent galvanometer with the voltage on and off.

6. Rotate the entire setup (galvanometer, compass, wires) 180° so it faces in the opposite direction with the electric contacts now on your left side. Make sure the plane of the wire coil and the compass are parallel. Slowly turn the voltage back up. What do you observe? Make another sketch.

7. What happens to the magnetic field of the tangent galvanometer when you reverse the direction of the current?

30 Magnetic Field of the Earth

Name _____ Section _____ Date _____

Objective

- A measurement of the earth's magnetic field.

Introduction

The magnetic field lines of a bar magnet, though emanating from its full length, are densest near the poles. These lines are typically not perpendicular to the faces of the magnet. The Earth, as you know, is like a giant bar magnet, with its magnetic south pole near its geographic north pole.

The field lines of the Earth's magnetic field, therefore, tend to point obliquely at any given spot on its surface. The angle (let's call it ϕ) that a line makes with a surface is known as its *dip angle* (see figure). Thus, each locality on earth has its characteristic value for ϕ with regard to the terrestrial magnetic field.

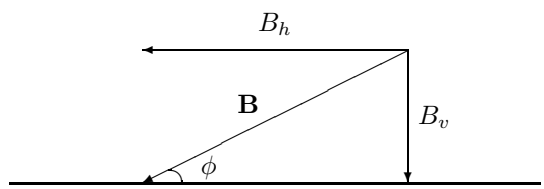

The horizontal component of the Earth's magnetic field,

$$B_h = B\cos\phi,$$

causes the magnetized needle of a compass to align in the geographic north-south direction.

You will use a tangent galvanometer to produce an additional horizontal magnetic field perpendicular to the Earth's field (in other words, one that points east or west). A tangent galvanometer consists of a vertical, circular coil of wire with N turns, a pedestal compass at the center of the coil, and electrical contacts so that a direct current can be established in the coil. The magnetic field at the center of the galvanometer coil by a current I in the coil is

$$B_c = N\frac{\mu_0 I}{2R}$$

where R is the radius of the coil and μ_0 is the permeability of free space (1.25664 x 10^{-6} T·m/A). B_c is perpendicular to the vertical plane of the coil. If the plane of the coil is placed in the north-south direction (that is, parallel to the compass needle when there is no current in the coil), then, when there is current in the coil, the compass will be influenced by two perpendicular fields, B_h and B_c. The compass needle will now point in the direction of the vector sum $\mathbf{B}_h + \mathbf{B}_c$.

Let θ be the angle through which the compass needle turns when the current in the tangent galvanometer is turned on. In other words, θ is the angle between $\mathbf{B}_h$ and $\mathbf{B}_h + \mathbf{B}_c$. Sketch a picture of these vectors, and use it to convince yourself that

$$B_h = \frac{B_c}{\tan\theta}$$

By measuring the angle θ, we can determine B_h. If we then measure the dip angle ϕ, we can determine the Earth's magnetic field by employing the first equation above.

Apparatus

- tangent galvanometer
- power supply
- ammeter
- ruler
- dip compass

Activity

1. Measure and record on the accompanying data sheet the diameter D of the coil. Calculate and record the radius R of the coil.
2. Count and record the number of turns, N, of the coil.
3. The tangent galvanometer is connected to an ammeter (in series) and power supply. Long wires connect the outside terminals of the coil to the circuit so that the coil may be removed from the magnetic effects of the ammeter and power supply. Be sure no magnetic material other than the compass is in the vicinity of the coil.
4. With the power supply off, align the plane of the coil parallel to the compass needle. Rotate the compass so that the needle points north and south on the compass.
5. Establish a current of about 0.5 A in the coil, as measured with the orange ammeter. Note that the compass needle rotates. It might be a good idea to tap lightly the face of the compass to be sure the needle hasn't become stuck. Record the current and the displacement angles at both the north and south poles of the needle. Calculate B_c. Average the north and south angles; use this average to calculate B_h.
6. Reverse the current and repeat step 5.
7. Repeat steps 5 and 6 for three additional, different currents of between 0.2 A and 0.8 A.
8. Taking the dip compass outside of the laboratory room, and preferably outside the building, determine and record the dip angle at four locations. Average these measurements and use the result for the dip angle, ϕ.
9. Calculate the Earth's magnetic field **B** for each set of data. Calculate an average value for **B** and a standard deviation. How far off, in terms of numbers of standard deviations, is your result from the accepted value for Richmond, 5.9×10^{-5} T?

Data Sheet

Diameter of Coil, D (m) _____

Radius of Coil, R (m) _____

Number of Turns of Coil, N _____

Dip Angle, ϕ (°): reading 1 _____ reading 2 _____ reading 3 _____ reading 4 _____

Average Dip Angle, ϕ (°): _____

Current (A)	Coil Field B_c (T)	North Angle θ_N (°)	South Angle θ_S (°)	Average Angle (°)	Horizontal Component B_h (T)	Earth's Field **B** (T)

Earth's Magnetic Field (measured), $<\mathbf{B}>$ (T) _____

Standard Deviation on Measurement, σ_B (T) _____

Number of Standard Deviations from Accepted Value, $\frac{|<B>-B_{accepted}|}{\sigma_B}$: _____

Show important calculations below:

31 Weighing an Electron

Name _____ Section _____ Date _____

Objective

To investigate the force on a charged particle due to a magnetic field and learn how the motion of the particle can be used to weigh it.

Apparatus

- e/m apparatus
- Low- and high-voltage power supplies
- Analog ammeter and digital multi-meter
- Flashlight

Overview

Mass spectroscopy is an experimental technique that is used to determine the mass of atoms, molecules, and sub-atomic particles. The central idea is to make a version of the particle carrying an electric charge (*e.g.*, a bare electron, an ionized molecule, *etc*), accelerate it through an electric potential, and then inject it into a magnetic field. If properly oriented, the magnetic field will bend the object into a curved path. The amount of curvature depends on the mass of the object and the electric charge it is carrying so that different mass particles with the same charge will bend by different amounts. Measuring this bend is equivalent to a mass measurement. This method is widely used to do things like determine the mass of newly discovered particles, hunt for oil, and even validate the authenticity of works of art.

Activity 1: Magnetic Force on a Charged Particle

It has been found by careful measurements that the force $\vec{F}_B$ on a charged particle due to a magnetic field is

$$\vec{F}_B = q\vec{v} \times \vec{B} \tag{1}$$

where q is the electric charge of the particle, $\vec{v}$ is its velocity, and $\vec{B}$ is the local magnetic field. Find the relevant sections in your text for a discussion of the cross product.

(a) The figure below shows the relationship between $\vec{F}_B$, $\vec{v}$, and $\vec{B}$. How is the magnitude of the cross product $\vec{v} \times \vec{B}$ related to the magnitude of v, B, and θ the angle between $\vec{v}$ and $\vec{B}$?

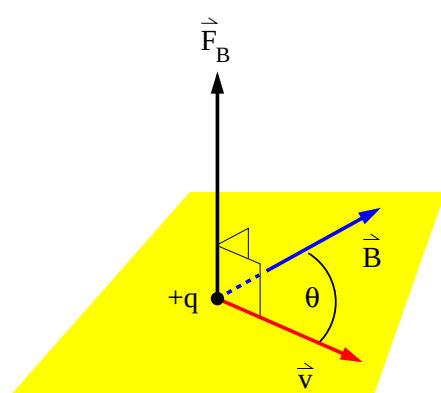

Figure 1: Vectors associated with the magnetic force.

(b) Consider a situation where the magnetic field is uniform in space and points in the z direction $\vec{B} = B\hat{k}$ and the velocity of the charged particle is in the y direction $\vec{v} = v\hat{j}$. What is θ, the angle between the magnetic field and velocity vectors? What is $\vec{F}_B$ in terms of the magnitudes of q, v, and B and the appropriate unit vectors?

(c) Describe the trajectory of the charged particle. What is the z component of its trajectory?

(d) What is the magnitude of the magnetic force as this charged particle moves through the region of the magnetic field? Does this magnitude change as the particle moves through the field?

(e) How are the directions of $\vec{F}_B$ and $\vec{v}$ related?

Activity 2: Relating $\vec{F}_B$ to the Kinematics

At the end of the previous section you should have found that the magnitude of the magnetic force is $|qvB|$ and that $\vec{v}$ and $\vec{B}$ are always perpendicular to one another.

(a) What type of force have we encountered that is perpendicular to the velocity and constant in magnitude? (Hint: Recall some of the applications of Newton's Laws in your text.)

(b) How is centripetal acceleration related to v and r (the radius of the circular motion)? What is the expression for the magnitude of the centripetal force $|\vec{F}_c|$?

(c) Equate the expressions for the magnitudes of $\vec{F}_B$ and $\vec{F}_c$. Why is this ok? Solve for the mass m in terms of the radius r of the particle's path, $|q|$, v, and B.

(d) Using your result from 2(c), answer the following questions. For two particles with the same charge and velocity, but different mass, which one will have the larger path radius? How will increasing the velocity change the path radius?

(e) Remember that in a mass spectrometer, the particle is first accelerated across an electric potential difference. Typically, we know the kinetic energy K of the charged particle after this acceleration instead of the velocity. Rewrite your result in 2(c) in terms of the kinetic energy K instead of the velocity v.

(f) The electron 'falls' across a potential difference created by the accelerating voltage to gain a velocity v before it enters the magnetic field region. Assuming the electron starts from rest, what is the relationship between the accelerating voltage and the kinetic energy K when it leaves the accelerating region and enters the magnetic field? Combine this result with the one from part 2(e) to get an expression for the mass of the electron in terms of the accelerating voltage V, the electron charge e, the radius of the electron's path r, and the magnetic field B.

Activity 3: Predictions for a Charged Particle in a Magnetic Field

We now have the mathematical tools to understand the motion of a charged particle in a magnetic field so we can start investigating the physics.

(a) First make some predictions. If $\vec{B} = B\hat{k}$ and $\vec{v} = v\hat{j}$, then what direction is $\vec{v} \times \vec{B}$?

(b) What direction is $\vec{F}_B$ for a positively charge particle if $\vec{B} = B\hat{k}$ and $\vec{v} = v\hat{j}$?

(c) What direction is $\vec{F}_B$ for a negatively charge particle if $\vec{B} = B\hat{k}$ and $\vec{v} = v\hat{j}$?

Activity 4: Measuring a Charged Particle in a Magnetic Field

The last piece of the puzzle before we start measuring things is the magnetic field $\vec{B}$. The apparatus you are using consists of a pair of wire coils (called Helmholtz coils) and an electron gun that produces a beam of electrons. See Figure 2 and identify the Helmholtz coils on your apparatus. The magnitude of the magnetic field along the

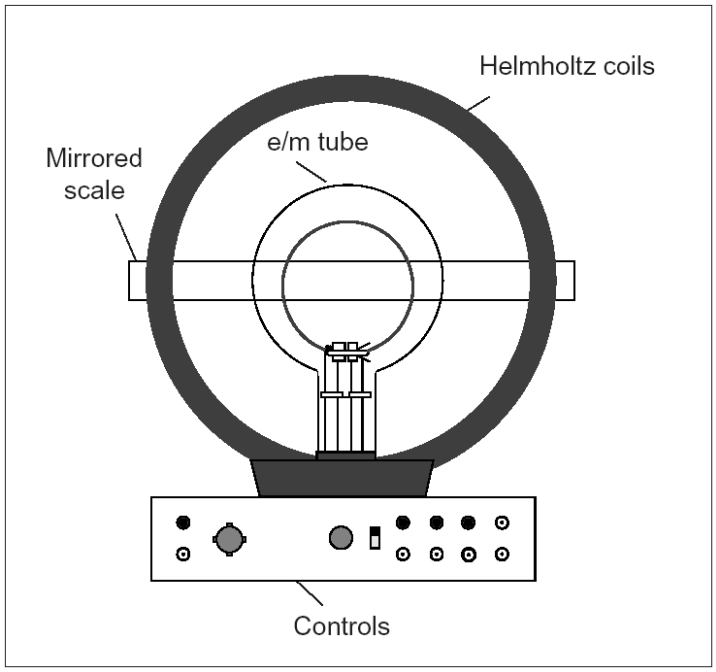

Figure 2: The e/m apparatus.

axis of the pair of coils is

$$B = \left(\frac{4}{5}\right)^{3/2} \frac{N\mu_0 I}{a} \tag{2}$$

where N is the number of turns of wire in each coil, μ_0 is the permeability constant, I is the current in the coils, and a is the radius of the coil. The direction of the field is parallel or anti-parallel to the axis of the pair of coils depending on the direction of the current in the coils. The direction of the current is the same in each coil. The magnetic field in the region between the coils is approximately equal to the field along the axis of the coils so we will use the expression above for our magnetic field in the equation you generated in Activity 2.f.

(a) Measure the radius of each coil of wire of the Helmholtz coils, average your results, and record them below. The number of turns of wire in each coil is $N = 130$.

(b) Identify each item on the front panel below the Helmholtz coils using Figure 3 as a guide. Check that all the connections are correct using Figure 3 as your guide.

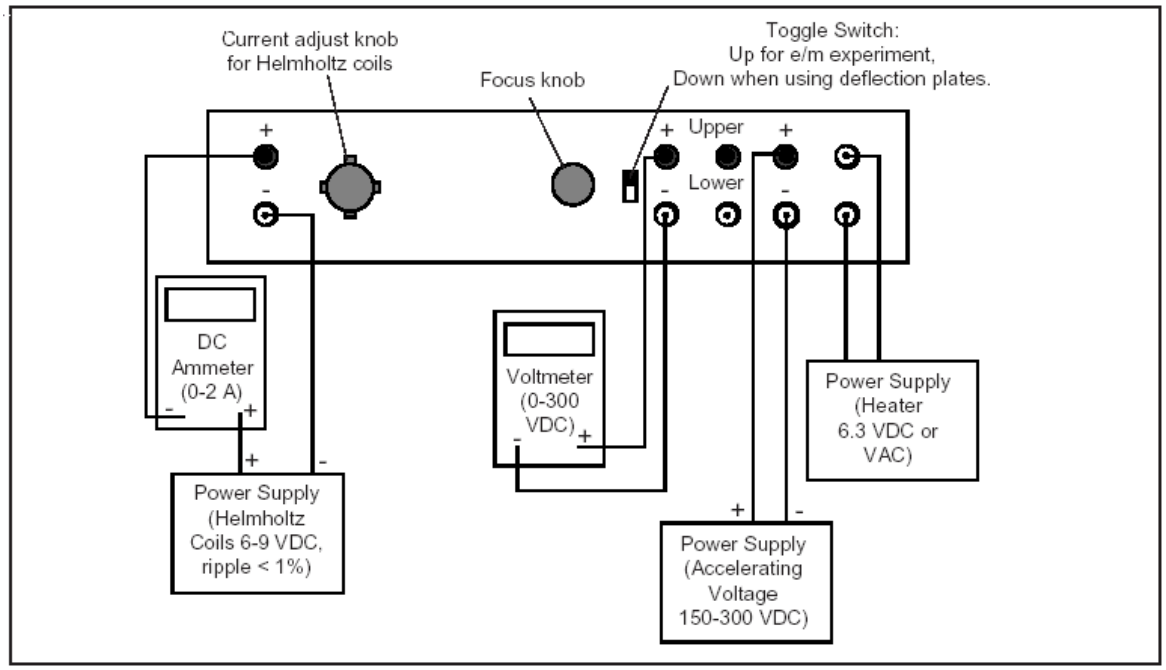

Figure 3: Instrument connections for the e/m experiment.

(c) Place the hood over the e/m apparatus and flip the toggle switch up to the e/m MEASURE position. Turn the current adjust knob for the Helmholtz coils to the vertical position (white line at the 12 o'clock noon position).

(d) Identify the ammeter used to measure the current in the Helmholtz coils using Figure 3 as a guide. Next, turn on the low-voltage power supply for the Helmholtz coils. Now watch the current in the ammeter (it should not exceed 2 A under any circumstances) and turn up the voltage on the Helmholtz coils into the range of $6 - 9\ V$.

(e) As you watch the ammeter slowly turn the current adjust knob for the Helmholtz coils clockwise. Take care that the current in the ammeter does not exceed 2 A. Set the current adjust knob for the Helmholtz coils in the $1.5 - 2.0\ A$ range.

(f) Identify the power supply that runs the heater for the electron gun using Figure 3 as a guide and turn on the power supply. Turn the voltage up to 6 volts. **CAUTION:** Do not exceed 6 volts or you may destroy the e/m tube.

(g) Turn on the power supply for the accelerating voltage for the electron gun. Turn the voltage up so that it is in the range of $150 - 300\ V$.

(h) Wait several minutes for the cathode to heat up. When it does, you will see the electron beam emerge from the electron gun and it will be curved by the field from the Helmholtz coils. Check that the electron beam is

parallel to the Helmholtz coils. If it is not, consult your instructor. Carefully read the current in the Helmholtz coils from your ammeter and the accelerating voltage from your voltmeter. Record the values below.

(i) Carefully measure the radius of the electron beam. Look through the tube at the electron beam. To avoid parallax errors, move your head to align the electron beam with the reflection of the beam that you can see on the mirrored scale. Measure the radius of the beam as you see it on both sides of the scale, then average the results. Record your results below.

(j) Slowly turn the current adjust knob for the Helmholtz coils either up or down as you watch the ammeter and take care that the current does not exceed 2 A. What parameter does this action effect, the magnetic field or the accelerating voltage? What happens to the path of the electrons as the current in the Helmholtz coils changes? Set the current adjust knob to some value and repeat parts 4.h-i to get a second measurement. Record the current in the Helmholtz coils, the accelerating voltage, and the average radius of the electron beam.

(k) Slowly change the accelerating voltage either up or down. What parameter does this voltage effect? Consider your result for part 2.f. What happens to the electron's path? Set the accelerating voltage to some value and repeat parts 4.h-i to get a third measurement. Record the current in the Helmholtz coils, the accelerating voltage, and the average radius of the electron beam.

(l) When you are finished, turn down to zero the accelerating voltage, the heater voltage, the Helmholtz coil voltage, and the current adjust knob.

Activity 5: Extracting the Electron Mass From Your Data.

(a) You should now have three separate measurements of the radius of the electron's path. Use Equation 2 to calculate the magnitude of the magnetic field B for each measurement.

(b) Almost there! Now calculate the electron mass for each of your three measurements using the values of the average r, V, and B. Record your results below.

(c) Can you spot any trends in your results for the electron mass? Try averaging the three results and determine the standard deviation. Is your average and uncertainty consistent with the accepted value of the electron mass? Is this averaging of your results acceptable in this situation? Why? What are the possible sources of uncertainty in this experiment?

32 Nuclear Decay and Radiocarbon Dating

Name _____ Section _____ Date _____

Objective

To develop an understanding of the use of the radioactive decay of atomic nuclei to date objects like the Shroud of Turin.

Apparatus

- Radioactive sources.
- Radiation counter.
- Jack.
- Isotope generator.
- Surgical gloves, eye protection, and lab coat for handling radioactive liquids.
- Lead and plastic sheets.

Introduction

Atoms can be broken down into light, negatively-charged, electrons, and a small, dense, positively-charged nucleus. These atomic nuclei can spontaneously break apart into smaller nuclei in a process called radioactive decay. By measuring the rate of this decay under the appropriate circumstances one can develop a "clock" that can be used to determine how long ago in the past an event occurred. In this laboratory we will apply this notion to a particular object, the Shroud of Turin which is purported to be the burial cloth of Jesus Christ.

Activity 1: Nuclear Terminology

Atomic nuclei can be constructed from protons and neutrons. The number of protons in a nucleus is called the atomic number and is represented by the letter Z while the number of neutrons is represented by the letter N. The protons carry a charge of +e while the neutrons are electrically neutral. The sum of these two quantities is the mass number A.

$$A = N + Z$$

Protons and neutrons are often referred to as nucleons.

Nuclei are represented using their chemical symbol (determined by the atomic number) and the mass number. For example, the most common form of carbon has six protons and six neutrons in its nucleus and is written as ^{12}C. If another neutron is added to this nucleus, then one has an isotope of carbon, ^{13}C. Isotopes of a chemical element have the same atomic number(Z), but have a different numbers of neutrons (N) and a different mass number (A). The difference is reflected in the value of the superscript on the chemical symbol.

(a) Consider the following list of the number of protons and neutrons that combine to form a particular nucleus. In the third column enter the chemical symbol and mass number as shown above (e.g., ^{12}C). Use the periodic chart at the end of this unit to determine what to enter in the third column.

Number of Protons	Number of Neutrons	Nucleus
7	8	
79	118	
26	30	

(b) Consider the following list of atomic nuclei. In the second and third columns enter the number of protons and neutrons in each nucleus.

Nucleus	Number of Protons	Number of Neutrons
^{4}He		
^{235}U		
^{108}Ag		

Some isotopes can spontaneously decay into other nuclei. In many of these decays the number of nucleons is conserved. This means that the number of protons and neutrons added together in the parent nucleus before the decay must be the same in the final products. Electric charge is always conserved.

(c) In the table below a nuclear decay is shown in the first column. In most cases the original nucleus (often referred to as the parent) produces two smaller nuclei (called daughters). Only one of the daughter nuclei is listed. In the adjacent column list the missing nucleus. Notice there are two emitted particles that we have not mentioned before. The e^- which is an electron and is often called a beta particle. It has almost zero mass compared to a nucleon. The other is γ and is called a "gamma" particle. This is photon or a particle of light or electromagnetic energy. The gamma has no mass or charge, but does carry energy and momentum.

Decay	Unknown
$^{190}\text{Po} \rightarrow {}^{4}\text{He} + ?$	
$^{210}\text{Th} \rightarrow {}^{4}\text{He} + ?$	
$^{16}\text{Ne} \rightarrow \text{p} + ?$	
$^{90}\text{Sr} \rightarrow e^- + ?$	
$^{60}\text{Co} \rightarrow \gamma + ?$	

Activity 2: The Properties of Radiation

An essential attribute of radiation is its ability to penetrate matter. Here we will study how three different types of radiation (alpha, beta, and gamma radiation) penetrate matter. We will do this by using a radiation counter and samples of three nuclei. The heart of the radiation counter is a gas-filled cylinder with a wire at high voltage running down its center. This cylinder is called a Geiger-Muller or G-M tube. Sub-atomic particles flying through the counter ionize atoms in the gas which are collected at the center wire producing a voltage pulse that can be measured. NOTE: Before going any further read the appendix on nuclear safety.

(a) Compare the figure below with your setup. Familiarize yourself with the different components. DO NOT TOUCH THE FACE OF THE DETECTOR INSIDE THE SNOUT UNDER ANY CIRCUMSTANCES.

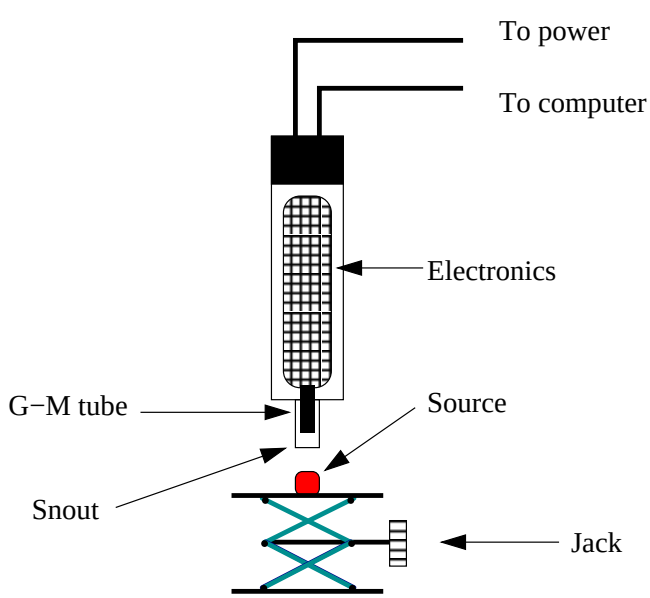

Figure 1. Schematic drawing of radiation counter and setup.

(b) Carefully remove the red, plastic cover on the snout of the radiation counter. DO NOT TOUCH THE FACE OF THE DETECTOR UNDER ANY CIRCUMSTANCES. This would likely break the window and destroy the counter.

(c) Obtain a set of radioactive sources from your instructor. Pick one of the sources, place it on the jack, and position the source about 1 cm below the snout of the radiation counter. Plug the power cord into a standard electric outlet and make sure the data cable is plugged into digital channel 1 on the *DataStudio* 750 interface. You should see the power light come on near the base of the counter (which is actually at the top). Another light near the snout of the counter blinks whenever a particle is detected. If you don't see either light, consult your instructor.

(d) Open the *Radiation Counter* activity in the **132 Workshop** menu and click the **Start** button on the *DataStudio* interface. Nothing will seem to be happening, but after 30 seconds (watch the clock at the top of the *DataStudio* interface) the number of radioactive decays detected by the radiation counter will appear. Record this result in the appropriate place in the table below.

(e) Now carefully place a piece of plastic on top of the source and run the counter for another 30 seconds. Record the result below.

(f) Remove the plastic and place a small sheet of lead on top of the source. Run the counter and record the result.

(g) Repeat steps d-f for the other two radioactive sources.

Radiation	Air	Plastic	Lead
γ			
β			
α			

(h) Which type of radiation is most penetrating? Why?

(i) Which type of radiation is least penetrating? Why?

(j) What material provides the best shielding of radioactivity? Why?

Activity 3: Background Radiation

(a) Return the radioactive sources to the instructor's table.

(b) With no radioactive sources nearby, make several runs with the radiation counter. The counts you observe in the detector are due to cosmic rays, radioactive decay in the building materials surrounding you, and even your own body. Record the counts and calculate the average and standard deviation of this background radiation.

Activity 4: Nuclear Decay

To understand the "clock" we will use to date the Shroud of Turin we will investigate how the clock "ticks". In this activity you will use a sample of radioactive material and a nuclear to detector to measure the behavior of the material as a function of time. We will then build a mathematical model of the time dependence of nuclear decay. We will apply this model to analyze the results of ^{14}C measurements on the Shroud.

To obtain the radioactive material we will use a procedure known as "milking the cow". We start with a liquid that contains the radioactive isotope ^{137}Cs or cesium-137. This isotope decays very slowly; it would take about 30 years for half of a sample to decay (a bit long for an introductory physics experiment). However, when ^{137}Cs does decay it usually does so in the following way.

$$^{137}\mathrm{Cs} \rightarrow \mathrm{e}^- + ^{137}\mathrm{Ba}(0.662)$$

Notice the additional number "0.662" beside the Ba-137. This number means there is still some energy (0.662 million electron-volts or MeV) stored in the Ba-137 nucleus and it has not yet reached its lowest-energy or ground state. This "excited" state of Ba-137 then emits a high-energy photon or gamma ray to reach the stable ground state of ^{137}Ba. A diagram of the process is below.

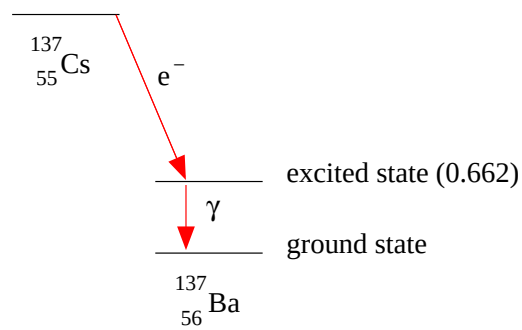

Figure 2. Decay scheme of cesium-137.

This intermediate state (labeled "0.662") decays quickly to the ground state and it is the one we will study.

We will prepare a sample of Ba-137 in its excited, 0.662-MeV state by starting with a Cs-137 "generator". The Cs-137 produces Ba-137 at a steady rate. We remove the Ba-137 from the "generator" by passing a hydrochloric-acid-saline solution through the generator (your instructor will do this). This is called eluting which means separate by washing. The generator is commonly referred to as the "cow" and the Ba-137 is "milked" from the cow. The Ba-137 is eluted from the generator and can then be used to study its decay.

(a) First, make a prediction of the count rate as a function of time. Sketch your prediction in the space below.

(b) What is the mathematical form of your prediction? Why did you choose it?

(c) Open the *Nuclear Decay* application in the **132 Workshop** menu. When you click **Start** it will plot the count rate in intervals of 10 seconds. Get the radioactive sources from your instructor and try this out with one of them to make sure you know how to use the hardware and software. Return the sources to your instructor when you are finished with this test.

(d) Read the rest of this procedure carefully. If you have to redo the procedure it may take a long time for the "generator" to produce enough Ba-137 for you to use.

(e) You have a small, metal disk called a planchette that sits on the jack which will be positioned close to the snout of the radiation counter. This will hold the radioactive material. Put the empty planchette in place and do a "dry run".

(f) One team member should be responsible for positioning the planchette. That person should put on the surgical gloves, eye protection, and a lab coat. The other team member can run the data acquisition.

(g) When you are ready, alert the instructor. He or she will come over and place a few drops of the eluate containing the Ba-137 on the planchette. Immediately place this under the Geiger counter and click **Start** on the *DataStudio* interface.

Caution: Care should be taken in handling the sample. If any portion of the sample touches your skin immediately wash off in the sink.

(h) Let the data acquisition run for about fifteen minutes or so and then click **Stop**. Dispose of the planchette according to the guidance from the instructor.

(i) Make a plot of your results using the data in the *Counts versus Time Table*. Notice that if you click on the title of the table, all of the data will be selected. You can then paste the data into *Excel*. Make sure you subtract the background radiation from your results.

(j) Make a fit to your data. What is the best choice of function for fitting your data? How did you make your choice? Attach a copy of your plot with the fit to this unit. Record the fit equation below. Do NOT close your spreadsheet. We may use it later.

Activity 5: Analyzing Nuclear Decay

Observation of a sample of radioactive material reveals that the decay of the atomic nuclei in the sample is determined by statistical processes. In other words, the number of nuclei N_{nuc} that decay per unit time is proportional to the number of nuclei in the sample.

$$\frac{dN_{nuc}}{dt} \propto N_{nuc}$$

This expression can be turned into an equality by inserting a constant of proportionality λ so

$$\frac{dN_{nuc}}{dt} = -\lambda N_{nuc}$$

where the minus sign is needed because the number of nuclei N_{nuc} decreases with time. The decay constant λ is a characteristic of each atomic nucleus.

(a) In the previous activity, you used a particular function to fit your data. Try to prove that you made the right choice by taking derivatives and seeing if they will satisfy the original differential equation above. Did it work?

(b) It is claimed the solution of the differential equation above describing nuclear decay is the following expression.

$$N_{nuc}(t) = N_0 e^{-\lambda t}$$

Prove this statement by taking the derivative of $N_{nuc}(t)$ and showing it satisfies the original differential equation. Make a sketch of the function and describe it in words. How did your fit function do?

(c) The decay of atomic nuclei is often characterized by a quantity known as the half-life τ. The half-life is the period of time for one-half of the original sample to disappear via radioactive decay. This statement can be expressed mathematically in the following way.

$$N_{nuc}(t = \tau) = \frac{N_0}{2}$$

Starting with the above expression show that the decay constant λ and the half-life are related by the following equation.

$$\tau = \frac{\ln 2}{\lambda}$$

(d) Now return to the results of your experiment. Does your count rate fall off exponentially? Did you fit your data with an exponential? If not, go back and do so. Record the decay constant λ.

(e) What is the half-life of Ba-137? Compare this with the accepted value of 2.552 minutes.

(f) Consider the following example as a warm-up. A sample of the isotope of iodine ^{131}I has an initial decay rate of 1.8 x 10^5 decays/s. This isotope has a half-life of 8.04 days. It is shipped to a medical diagnostic laboratory where it will be used as a radioactive tracer. When the shipment arrives at the lab the decay rate has fallen to 1.4 x 10^5 decays/s. How long did it take for the shipment to reach the laboratory?

Activity 6: Dating the Shroud of Turin

The previous example shows how one can use the measured decay rate of an atomic nucleus as a "clock" to determine the passage of time. The same concept is used in radiocarbon dating. Carbon on the planet Earth consists largely of three isotopes with A = 12, 13, and 14. The most common form is ^{12}C and only a very small fraction of the carbon is ^{14}C. However, ^{14}C decays via

$$^{14}\mathrm{C} \rightarrow {}^{14}\mathrm{N} + \beta^- + \overline{\nu}$$

where β^- is an electron and $\overline{\nu}$ is a particle known as a neutrino. Notice this decay does NOT preserve the number of protons and neutrons in the original nucleus. The ratio R of ^{14}C to ^{12}C on the Earth is 1.30 x 10^{-12} and is roughly constant despite the fact that the ^{14}C constantly disappears. The ratio is constant because the supply of ^{14}C in the atmosphere is replenished by the reaction of cosmic rays from outer space with the nitrogen in the upper atmosphere.

Living organisms contain large quantities of carbon and are constantly exchanging carbon with their surroundings. They contain the same proportion of ^{14}C to ^{12}C as observed in the atmosphere. However, this proportion begins to change after the organism dies. The ^{12}C remains in the dead body, but the ^{14}C turns into gaseous ^{14}N (see decay above) and leaves the body. Hence, the proportion of ^{14}C decreases with time, and one has a "clock" that can be used to determine when an organism died.

The Shroud of Turin is a piece of cloth that bears the image of a man who appears to have been crucified. It was first displayed in France in the fourteenth century and has been kept at the Royal Chapel of Turin Cathedral in a special shrine since 1694. Many believe the image on the Shroud is of Christ and the cloth is his burial wrap. In 1989, three laboratories in Arizona in the USA, Oxford in the UK, and Zurich in Switzerland used advanced methods of radiocarbon dating in an attempt to determine the age of the Shroud[1]. The Shroud is woven of cloth made from plants. Like a living organism that has died, the ^{14}C in the Shroud began to gradually disappear after the plants used to make it were harvested.

(a) The half-life of ^{14}C is 5730 years. What is the decay constant λ?

(b) The three laboratories obtained the following results for the ratio R of ^{14}C to ^{12}C. The ratio of ^{14}C to ^{12}C in the atmosphere is $R_i = 1.30 \times 10^{-12}$. What is the implied age of the Shroud for each measurement? Use the space below for your calculations and enter the results in the table.

Laboratory	R_f	Age (years)
Arizona	1.20×10^{-12}	
Oxford	1.18×10^{-12}	
Zurich	1.19×10^{-12}	

(c) What is the average age of the Shroud?

(d) The typical uncertainty in these measurements is a standard deviation of ± 40 years. Are the results of the three laboratories consistent?

(e) Is the age of the Shroud consistent with it being the burial wrap of Christ?

(f) Are there any reasons to doubt these results?

Homework

1. The half-life of a particular radioactive isotope is 6.5 h. If there are initially 48 x 10^{19} atoms of this isotope, how many atoms of this isotope remain after 26 h?
2. A radioactive isotope of mercury, ^{197}Hg, decays into gold, ^{197}Au, with a disintegration constant of 0.0108 h^{-1}. (a) What is its half-life? (b) What fraction of the original amount will remain after three half-lives? (c) What fraction will remain after 10.0 days?
3. The radionuclide ^{64}Cu has a half-life of 12.7 h. How much of an initially pure, 5.50-g sample of ^{64}Cu will decay during the 2.0-h period beginning 14.0 h later?

The Periodic Chart

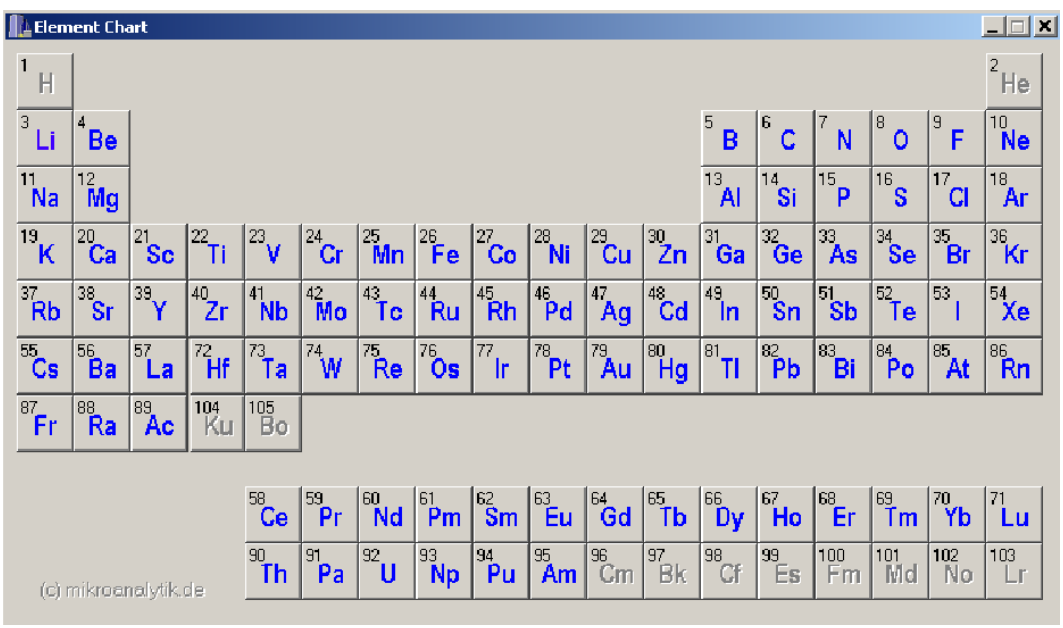

References

1. P.E.Damon, D.J.Donahue, B.H.Gore, A.L.Hathaway, A.J.T.Jull, T.W.Linick, P.J.Sercel, L.J.Toolin, C.R.Bronk, E.T.Hall, R.E.M.Hedges, R.Housley, I.A.Law, C.Perry, G.Bonani, S.Trumbore, W.Woelfli, J.C.Ambers, S.G.E.Bowman, M.N.Leese, and M.S.Tite, *Nature*, Vol. **337**, No. 16, P. 611-615.

33 Electromagnetic Induction

Name _____ Section _____ Date _____

Objectives

To investigate:

- The effect of changing magnetic fields on charge and current.

Introduction

A charged object moving through a magnetic field experiences a force which is proportional to the magnitude of its charge and to its speed perpendicular to the field: $F = qvB_{\perp}$. Changing the number of magnetic field lines–the flux–through a coil of wire results in a current in the wire. The direction of this current is such that the magnetic field it produces opposes the change in the external field. Similarly, varying the current in one coil (the primary) produces a current in another nearby coil (the secondary). The current in the second coil, too, will flow in a direction that creates a magnetic field which opposes the change in the field of the first coil. These relationships between changing fields and currents are known collectively as electromagnetic induction.

Apparatus

- one small wire coil
- bar magnet
- Pasco 750 Interface

Activity 1: A Moving Magnet and a Coil

1. Turn on the computer and launch *EM Induction* in the 132 Workshop in the **Start** menu.
2. Place a bar magnet vertically along the axis of the small coil with the N-pole touching the coil.
3. Start recording data and lift the bar magnet quickly straight up.
4. At the end of the data taking interval, the computer should display a value for the electromotive force (emf) induced in the small coil. Several trials may be required to get the correct timing between starting the data acquisition and removing the magnet. Note and record the sign of the induced emf.

5. **Prediction**: If you lower the magnet, N-pole down, quickly toward the coil, what will be the sign of the emf?

6. Carry out the experiment, starting the data acquisition, then lowering the magnet. Record the sign of the induced emf.

7. Did your result confirm or refute your prediction?

8. **Prediction**: What will happen to the emf if you perform the same pair of experiments with the S-pole toward the coil?

9. Perform the two experiments, lifting and lowering the magnet, with the S-pole down. Record the sign of the induced emf in each case.

10. How did the results compare with your predictions?

Activity 2: Predictions About Making Waves Electromagnetically

Consider what we have observed about electricity and magnetism. A static, unchanging magnetic field does not do much to our coil of wire. A varying magnetic field creates, across space, a current in our coil. The changing magnetic field must be creating an electric field or else the electrons in the coil would not feel a force. We have also observed phenomena where a changing electric field induced a magnetic field. In other words, a changing electric field induces a magnetic field and vice versa; a changing magnetic field induces an electric field. Notice these statements don't require the presence of electrons or other material. The fields can be induced in a vacuum. We are now going to explore via a simulation, what happens when charges are wiggled (*i.e.* oscillate) up and down.

1. To begin to explore our wiggling charges, consider some questions. Suppose the motion of the charges can be described as an oscillating dipole so the dipole moment as a function of time looks like Figure 1. Assume the dipole is aligned with the z-axis. What do you expect the electric field to look like as a function of time at some arbitrary distance r away from the source in the $x-y$ plane? What is the direction of the $\vec{E}$ field? Make a sketch of your answer on the plot and label your curve.

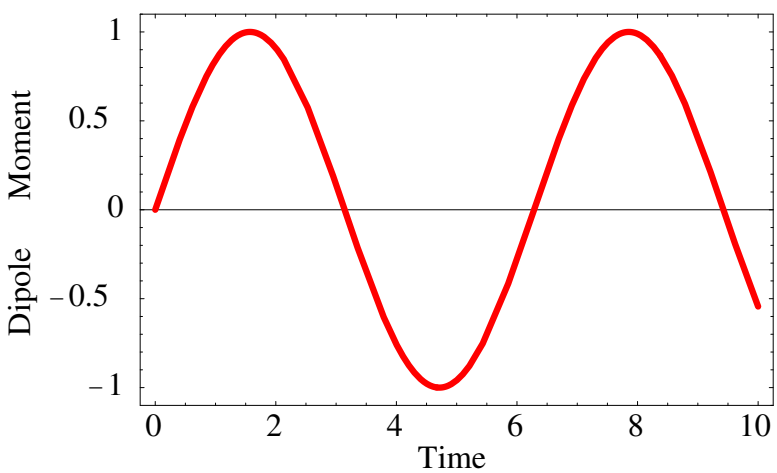

Figure 1: Time dependence of a dipole source oriented along the z-axis.

2. What would the magnetic field strength look like as a function of time at the same distance r from the source? In what direction does the $\vec{B}$ field point? How are the directions of the $\vec{E}$ and $\vec{B}$ field related? Draw a dashed line on Figure 1 to represent the magnetic field strength.

Activity 3: Simulating Electromagnetic Waves

We are now going to use a computer simulation to investigate the behavior of our oscillating dipole. The situation we are exploring is very similar to the generation of radio waves with an antenna. Charges (usually electrons) are driven up and down in the antenna and emit electromagnetic waves.

1. Open *Internet Explorer* (*IE*) and go to the website `http://www.falstad.com/emwave2`. A Java applet will pop up showing brightly colored waves like the ones in Figure 2 propagating outward from our oscillating electric dipole. If you don't see this window, consult your instructor.

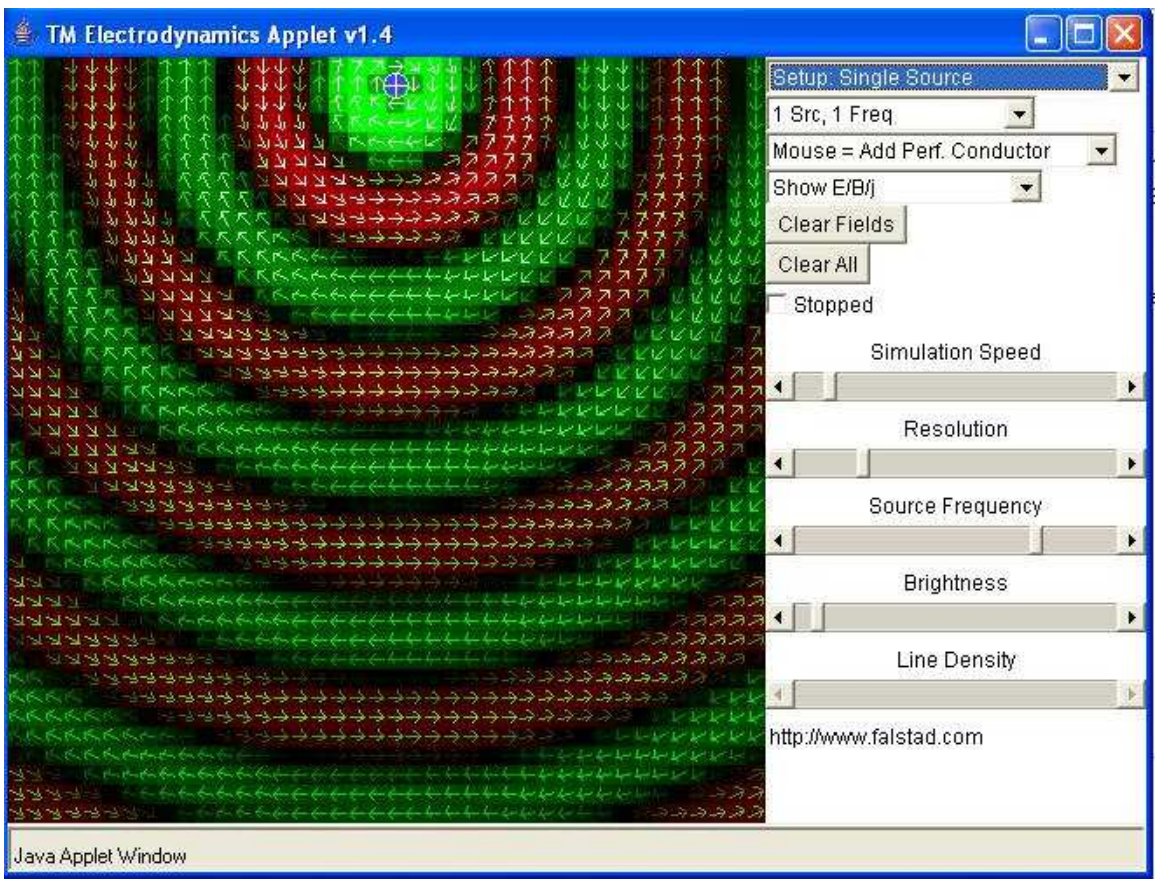

Figure 2: Applet showing electromagnetic waves.

2. It is useful to slow down the simulation speed to observe the waves more clearly. Do this using the slide labeled `Simulation Speed` on the right-hand side of the applet window. The alternating yellow and blue circle at the top of the applet is the source (the dipole) as viewed from above. The color indicates the electric field; green areas are positive ($\vec{E}$ toward you) and the red areas are negative ($\vec{E}$ away from you).

The electric field is always perpendicular to the plane of the screen. In addition to the red and green color, you will see arrows which indicate the direction of the magnetic field (which is always in the plane of the screen). Also, sources and conductors may show a blue or yellow color, indicating current. Yellow means that current is flowing toward you and blue means it is flowing away from you. Describe what you see in your own words.

3. Are these waves spherical or plane waves? Why?

4. What is the orientation of the $\vec{E}$ field? What is the orientation of the $\vec{B}$ field? How are the two related?

5. Go back to your predictions in Activity 2 about the directions of the $\vec{E}$ and $\vec{B}$ fields. Compare your predictions with these observations. Correct any disagreements.

6. Reduce the frequency of the oscillation of the dipole using the slide labeled `Source Frequency` on the right-hand side of the applet. You may have to increase the brightness of the applet using the slide labeled `Brightness`. What happens to the distance between equal positions on successive waves (*i.e.*, successive peaks or crests of the waves defined by the red regions in the applet)? This distance is called the wavelength and it is characteristic of a particular wave. Light, for example, is an electromagnetic wave and different wavelengths correspond to different colors.

7. One can calculate an quantity known as the Poynting vector which points in the direction of the flow of energy in an individual wave. Make the applet draw the Poynting vector by clicking on the arrow in the box with `Show E/B/j` entered in it. Scroll up or down until you find `Show Poynting vector` and highlight it. In what direction does the energy flow?

8. Go back to `Show E/B/j` mode you were in before. Just for fun, we want to introduce one of the central phenomena associated with waves known as interference. Go to the second menu from the top of the right-hand side of the applet. Click and highlight `2 Src, 1 Freq`. This will place an additional oscillating dipole at the bottom of the applet. Describe what happens. When waves add together they can cancel

one another (this is called destructive interference). Do you observe destructive interference? What do you think happens for constructive interference?

9. Now use your mouse to grab one of the sources and drag it to a position near the other one. How does the interference pattern change? Try different positions for the source (move it closer or further away). Describe what you see. If these were light waves, where would you see bright light? Where would you see dark regions?

Activity 4: Plane Waves

You just completed a study of spherical waves emitted by a dipole source. We now want to consider another type of wave that we will study when we explore light.

1. Use *IE* to go to the site `http://www.amanogawa.com/archive/PlaneWave/PlaneWave-2.html` and a Java applet will appear like the one in Figure 3. If you don't see this window, consult your instructor. The top panel of the applet shows a plane, electromagnetic wave. The red lines represent the direction and magnitude of the $\vec{E}$ field and the blue ones do the same for the $\vec{B}$ field. NOTE: The magnetic field in this applet is labeled $\vec{H}$. In this case, this is exactly the same as our previous $\vec{B}$. To eliminate some unnecessary lines, click the box beside `Phasors` so the check in the box disappears.

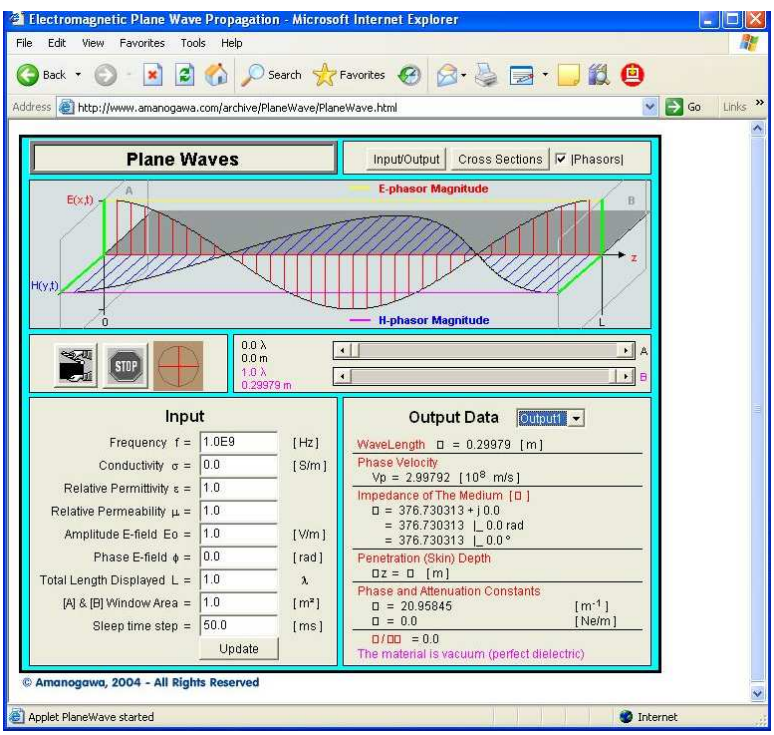

Figure 3: Applet showing plane electromagnetic waves.

2. Why do you think it's called a plane wave?

3. What is the orientation of the $\vec{E}$ field? What is the orientation of the $\vec{B}$ field? Compare your answer here with your predictions in Activity 2 and your observations in part 3.6. Correct any disagreements.

4. Click the start button to watch the wave move or propagate. The button is the one to the left of the STOP button on the left-hand side of the applet. Describe what happens to the electric and magnetic fields and how they are related (*i.e.* When the $\vec{E}$ is large, what is the $\vec{B}$ field doing?).

5. Click on the `Cross Sections` button at the top of the applet. You will see new panels that show the $\vec{E}$ (red) and $\vec{B}$ (blue) vectors in cross section at the planes A and B labeled in the top panel. Use these vectors to confirm your observations in parts 4.3-4.4.

6. Use the B slide in the middle of the right-hand-side of the applet to move the B cross section position. Set it one-half wavelength from the A cross section. How are the $\vec{E}$ and $\vec{B}$ vectors in the A cross section related to their partners in the B cross section. What will be the total electric and magnetic fields if two waves are added that are out of line by one-half wavelength?

34 Electromagnetic Induction II

Name _____ Section _____ Date _____

Introduction. In this lab, we'll take a further look at Faraday's Law, which says that a changing magnetic field can produce an emf (that is, a voltage) in a loop of wire. Current will be supplied to the large coil, resulting in a magnetic field. If the current were constant in time, then a steady magnetic field would be produced. Since we want to produce a changing magnetic field, we supply the coil with *alternating current*, that is, current that flows back and forth in alternating directions, oscillating in a sine-wave fashion. The result is an ever-changing magnetic field, which induces an emf in the small coil.

Activity 1: Qualitative predictions. Suppose that the top graph on the last page represents the current flowing through the large coil as a function of time. When I is positive, that means current is flowing counter-clockwise around the coil, and when I is negative the current is clockwise. On the axes below, sketch the shapes of the following other quantities. In each case, don't worry about the overall scale on the vertical axis; just focus on the shapes of the graphs, and particularly the locations of the peaks and valleys. Hint: some of the graphs will be exactly the same shape as the given graph of I.

1. On the first set of axes, sketch the vertical component of the magnetic field, B_z, at the center of the coil.
2. On the the next set of axes, sketch the magnetic flux Φ_B passing through the small coil.
3. On the bottom set of axes, sketch the emf $\mathcal{E}$ induced in the coil.

The computer will measure and graph $I(t)$, the current in the large coil, and $\mathcal{E}(t)$, the emf in the small coil. We want to test whether the two graphs are related to each other in the way you predicted. To be specific, make the following predictions from your graphs before trying the experiment:

1. At times when $I(t)$ is at its maximum value, what is $\mathcal{E}$?

2. At times when $I(t)$ is at its minimum value, what is $\mathcal{E}$?

3. At times when $I(t) = 0$, what is $\mathcal{E}$?

Activity 2: Testing the predictions. The apparatus should be wired up to the computer interface in the following way. The two ends of the large coil should be connected to the inputs on the right side of the interface.

These inputs supply alternating current to the coil. The two ends of the small coil should be connected to a voltage sensor, which is plugged into slot A on the interface. If you're not sure whether things are hooked up correctly, consult your instructor. Place the small coil in the center of the large coil. Both coils should be arranged horizontally (that is, with the axis pointing straight up and down).

Start the program called "induction2." You should see two graphs, one showing the current in the large coil and one showing the emf (voltage) across the small coil. Both graphs will be blank until you start taking data, of course. There should be an additional box that allows you to control the frequency of oscillation of the alternating current. Leave this alone for now; we'll mess around with it later.

Hit "Start" and take data for about 20 seconds. Do the shapes of the two graphs generally match your predictions from Activity 1?

If the answer to this question is "yes," then go on. If it's "no, the shape of the second one is exactly the opposite of what I expected," then you just have the small coil upside-down. Turn it over and try again. If the answer is not one of those two, then consult your instructor.

Let's be a bit more specific in comparing the predictions with the data. Examine the current graph, and record the times of the first four moments when the current reaches a maximum. Then look at the other graph, and record the emf at those same four times. Are the results consistent with your prediction number 1 in Activity 1? (It may help if you drag the horizontal axis of your graphs to expand the scale.)

Perform a similar analysis to check your predictions 2 and 3 from Activity 1. In each case, check several appropriately-chosen moments of time to see if the relationship between I and $\mathcal{E}$ is as you predicted.

Suppose that you rotate the small coil 90°, so that its axis is horizontal. What do you predict about the resulting emf? Test your prediction.

Activity 3: A more quantitative analysis. In Activity 1, we just looked at the shapes of the graphs, without worrying about the exact details. Let's do the same analysis a bit more precisely. The current in the coil is described by the equation

$$I(t) = I_{\max} \sin(2\pi f t).$$

Here $I_{\max}$ is the maximum value of the current, and f is the frequency (that is, the number of cycles per second). Assuming that the large coil consists of N_1 circular loops of wire, each with radius R, write down a similar expression for $B_z(t)$, the magnetic field at the center of the coil.

Now suppose that the small coil consists of N_2 loops of wire, each having area A. Write down an expression for $\Phi_B(t)$, the flux through the small coil.

Using Faraday's Law, give an expression for $\mathcal{E}(t)$, the emf in the small coil.

What is the maximum emf $\mathcal{E}_{\max}$? Express your prediction in terms of quantities such as $I_{\max}, f, A, N_1, N_2, R$.

Rearrange this expression so that it has the quantities $\mathcal{E}_{\max}, I_{\max}, f$ on the left-hand side, and everything else on the right.

We will now try an experiment in which we vary the frequency f. We'll find that this results in changes in both the current and the emf. But note that everything on the right-hand side of the above expression must remain constant throughout this experiment. That means that the expression on the left must also remain constant. We will test this prediction.

Record the frequency f, the maximum current $I_{\max}$, and the maximum emf $\mathcal{E}_{\max}$ from your data. Then, using the box on your screen that controls the current in the coil, change the frequency to a higher value, and record these three quantities again. Repeat this a total of four times, so that you have four sets of values $f, I_{\max}, \mathcal{E}_{\max}$. Take care not to move the coils from one run to the next.

You made a prediction above that a certain combination of these three quantities would remain constant throughout this experiment. Calculate that quantity for each of the four data runs. Are the results consistent with your prediction?

Graphs for Activity 1

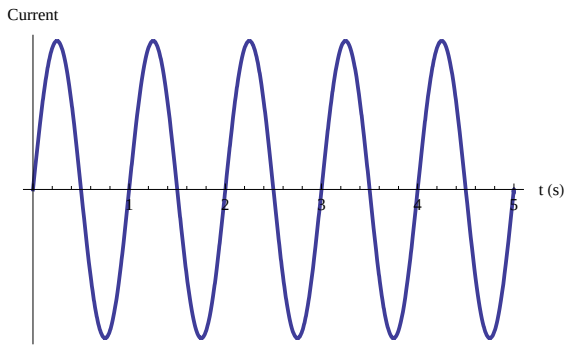

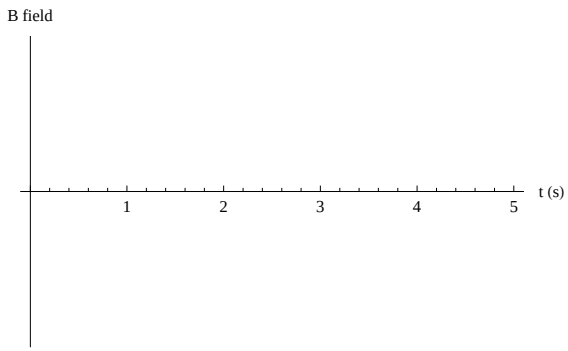

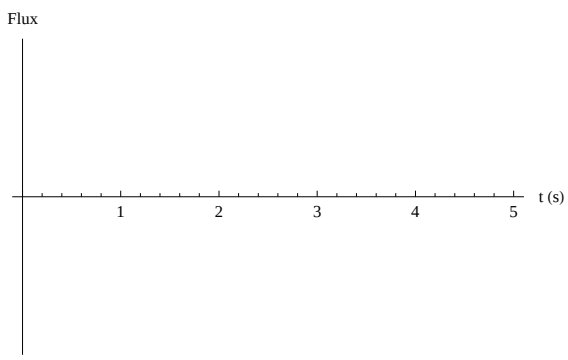

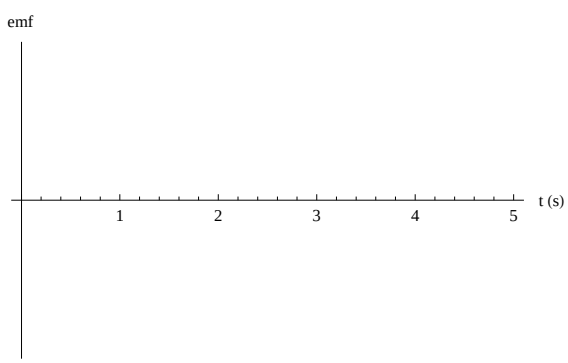

35 The Generator

Name _____ Section _____ Date _____

Objectives

- To understand Faraday's Law of Induction.
- To discover how an electric generator works.

Introduction

The amount of magnetic field that passes (or the number of magnetic field lines that pass) perpendicularly through a bounded region is known as the magnetic flux through that area. Mathematically, the flux is given by

$$\Phi = B_{\perp} A = BA\cos\theta$$

where the symbol $\perp$ indicates the perpendicular component and θ is the angle between the direction of the magnetic field and the normal to the surface of the area (see figure below).

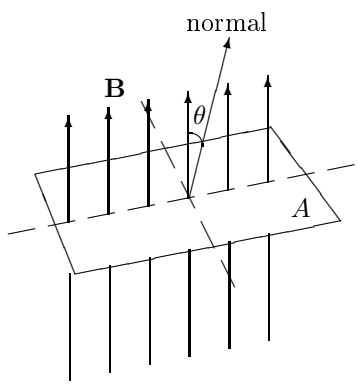

When the boundary of the region is a loop of wire, and the amount of flux through it changes, an electromagnetic force (emf) is induced in the loop. Faraday's law states that the magnitude of the emf in a single loop is proportional to the amount of flux change in one unit of time: $\varepsilon = -\Delta\Phi/\Delta t$, where the minus sign indicates that the polarity of the coil voltage opposes the flux change (Lenz's Law). That is, if the flux decreases, the emf will cause current to flow in the coil in such a way (using the right-hand rule) as to create a magnetic field that compensates for the loss. If the flux increases, the emf will cause the current to flow in the opposite direction.

- Faraday's law was given for a single loop coil; what is Faraday's law for a coil of N turns?

- Assume the coil is rotating clockwise around the axis OO′ (see figure below). In what direction (towards O or towards O′) does the induced current flow when the coil has rotated through an angle of 90° from the position shown?

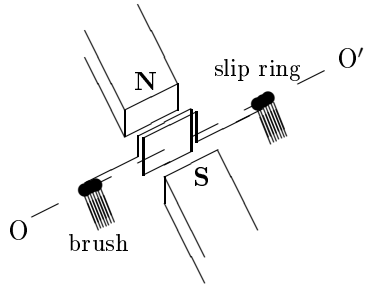

A generator converts mechanical power into electrical power. It generally consists of magnets, a coil (also called the armature), and a device (like a pair of slip rings and brushes) to connect the coil to terminals.

- What happens to the potential difference across the terminals as the armature rotates? Explain.

- Recalling that magnetic field lines run from north pole to south pole, what will be the magnitude of the emf as it passes through the position shown in the drawing above.

- At what angle, θ, will the current be a maximum?

The change in flux through a single loop is determined by taking the derivative of the first equation:

$$\Delta\Phi = \Delta(BA\cos\theta) = -BA\Delta\theta\sin\theta.$$

Then the emf is $\varepsilon = BA\omega\sin\theta$, since $\varepsilon = -\Delta\Phi/\Delta t$ and $\Delta\theta/\Delta t = \omega$. So, the induced emf is proportional to $\sin\theta$.

- What is the induced emf in terms of $\sin\theta$ for a coil with N turns?

- **Prediction**: Sketch a graph of the induced emf you expect in the multiple-loop armature of a generator as a function of angle, θ. Make your prediction for angles: $0° < \theta < 360°$. Under the reasonable assumption that the resistance is constant as the coil rotates, what do you expect a graph of the current in the coil as a function of θ to look like?

Note: The model generator you will use in this experiment consists of a coil which rotates in a nearly uniform field produced by two sets of permanent horseshoe magnets. A spring-and-ratchet mechanism rotates the coil in equal steps: the spring providing a torque and a ratchet wheel turning 10° each time the ratchet is released. The spring is loaded by pushing down on a catch arm, and the ratchet is released by tipping it to one side or the other.

Apparatus

- model generator
- galvanometer

Activity

1. Connect the armature terminals of the model generator to the galvanometer, which in this configuration measures current.
2. Rotate the coil through a 10° interval. Observe and record (under the Deflection (I) column of the table below) the maximum deflection of the galvanometer. The maximum value will be reached instantaneously, so observe carefully along with at least one lab partner. It gets easier with practice.
3. Repeat the procedure for each 10° rotation of the coil over one complete revolution. The numbers on the wheel are 1/10 the angles of the coil with respect to the vertical. Reload the spring after every second rotation to ensure the spring tension, and therefore, the speed of rotation remains the same. Hold the wheel while reloading to prevent it from moving. Note that the deflection of the galvanometer corresponds to the position of the coil at the middle of its movement.
4. Take another set of data and record it under Deflection (II).
5. Average the two readings for each angle and record in the appropriate column.
6. Plot Average Deflection (y-axis) vs. angle (x-axis) and draw a smooth curve as best you can through the points.
7. How do the curves compare to your prediction? Explain.
8. If the resistance of the model generator coil were doubled, while the size, shape and number of turns remained the same, what would be the effect on the e.m.f. produced in the coil?
9. If the coil resistance were doubled, what would be the effect on the galvanometer deflection?
10. What effect would changing the speed of rotation have on the galvanometer deflection?

Coil Setting (θ) [degrees]	Deflection (I)	Deflection (II)	Average Deflection	$\sin\theta$	Avg. Deflection $\times \sin\theta$

36 The LR Circuit

Name _____ Section _____ Date _____

Objective

To investigate the relationships among the voltages in a series LR circuit.

Apparatus

- DataStudio 750 Interface
- AC/DC Electronics Laboratory
- Resistor (5Ω)
- Inductor and iron core
- Voltage sensors (2)
- Digital multimeter (DMM)
- LR Circuit activity
- Wires to complete the circuit

Introduction

In this exercise you will study a series LR circuit. If a sinusoidally varying source of emf with a frequency f is placed in series with a resistor and a pure inductor, the current I will vary with the same frequency as the generator, but it will be shifted in phase by an angle ϕ relative to the voltage of the generator. The voltage across each of the circuit elements has its own characteristic phase relationship with the current. The voltage across the resistor V_R is in phase with the current I, the voltage across the inductor V_L leads the current by 90°, and the voltage across the generator leads the current by the phase angle ϕ whose value is dependent on the circuit parameters. Measurements of the voltage across each element in a series circuit containing an inductor, a resistor, and a sine wave generator will be used to perform a detailed study of the LR circuit.

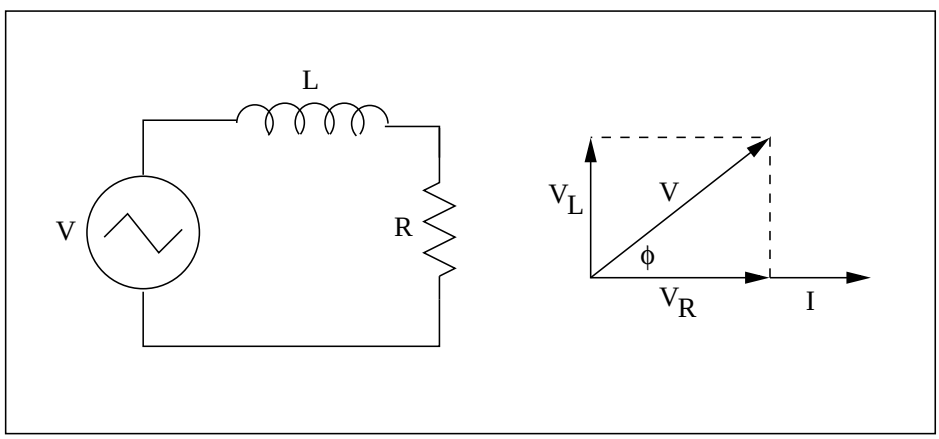

Let's begin by considering the circuit obtained by placing a pure inductance L and a resistor R in series with a sine wave generator with a voltage amplitude V as shown in the figure above. Also shown in the figure is a phasor diagram for the circuit. Note that the voltage across the resistor V_R is in phase with the current I, the voltage across the inductor V_L is 90° ahead of I, and the generator voltage V is angle ϕ ahead of I. From the phasor diagram we can write

$$V = \sqrt{V_L^2 + V_R^2}$$

and

$$\tan\phi = \frac{V_L}{V_R} = \frac{I\omega L}{IR} = \frac{\omega L}{R}$$

where ω =2πf is the angular frequency of the generator and we have used the inductive reactance and Ohm's Law.

Real inductors have both an inductance L and an internal resistance r. A real inductor can be represented by a pure inductance L in series with a resistance r. In the figure below a real inductor is shown in series with a resistor R and a generator of voltage amplitude V. Also shown in the figure is a phasor diagram for the circuit. The voltage across the real inductor is referred to as V_{ind}. There is, of course, some voltage V_L across L alone, and some voltage V_r across r alone. However, there can be no direct measurement of V_L or V_r since they are from the same length of wire. The only quantity which can be measured is V_{ind} which is the vector sum of V_L and V_r. Applying the law of cosines to the triangle formed by V, V_R, and V_{ind} leads to the following equation.

$$V_{ind}^2 = V^2 + V_R^2 - 2VV_R\cos\phi$$

Solving this equation for cos ϕ we get

$$\cos\phi = \frac{V^2 + V_R^2 - V_{ind}^2}{2VV_R}$$

Further examination of the phasor diagram shows that the unknown voltages V_L and V_r can be determined from V, V_R, and ϕ by the following:

$$V_L = V\sin\phi$$
$$V_r = V\cos\phi - V_R$$

The current I can be related to the voltage across each element by the following equations:

$$V_L = I\omega L$$

$$V_R = IR$$

Once V_L and V_r have been determined, the equations above can be used to solve for ωL by eliminating I to get

$$\omega L = R\frac{V_L}{V_R}$$

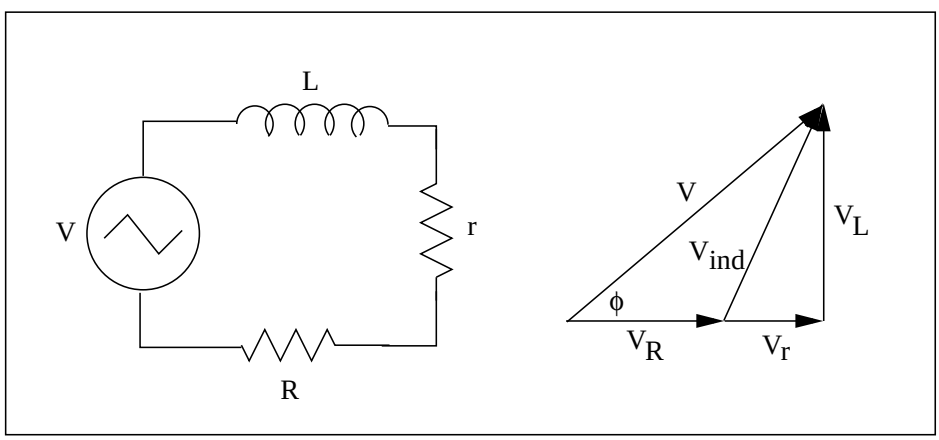

Activity 1: Voltage in the LR Circuit

In this laboratory you will be using a voltage source that varies sinusoidally in time. What will the voltage from this source look like as a function of time? In the space below sketch your answer. What is the phase relationship between the source voltage and the voltage drop across an inductor? Sketch that relationship on the same graph below. Label your curve V_{ind}. What is the phase relationship between the voltage drop across a resistor in the LR circuit and the source voltage? Sketch it below and label it V_R.

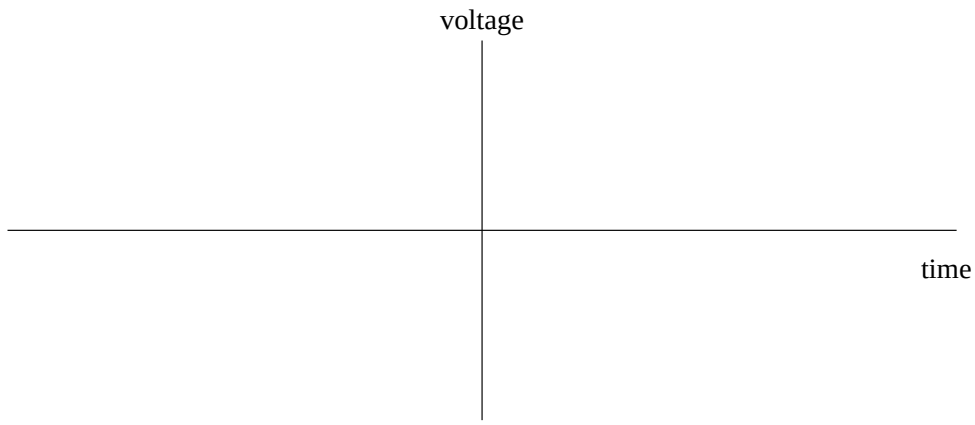

Activity 2: Measuring Voltages

(a) Construct a data table with 2 columns and nine rows in the space below. In the first column, label the rows R (Ω), r (Ω), V (V), V_R (V), V_{ind} (V), ϕ (deg), V_L (V), V_r (V), and L (H).

(b) Open the *LR Circuit* activity in the 132 Workshop folder in the Programs menu. Go to the 'Signal Generator' window and set the frequency to 50 Hz, the amplitude to 3.0 V, and the wave form to 'Sine Wave'. If you can't find the 'Signal Generator' window, click the 'setup' button at the top of the DataStudio menu. You will see an image of the Pasco 750 interface with several connections marked. Single click on the one called 'Output'. The 'Signal Generator' window should pop up. Set the values on it and return to the original voltage graph window.

(c) Set up the circuit on the AC/DC Electronics Laboratory so that it corresponds to the one shown in the second figure. The iron core (a long metal cylinder) should be inserted in the inductor. The inductor is the large open, cylinder in the upper-right-hand part of the AC/DC Electronics Laboratory. The computer is set up to measure the voltage across each of the circuit elements. The resistor in the circuit has a value $R \approx 5\Omega$. Check this value with the DMM and record it as R on your data sheet. Measure and record the value for r with the DMM. **NOTE: These values must be measured with R and L disconnected from the circuit.**

(d) Take data by clicking the *Start* button. The computer will display three sinusoidal voltage signals. The color scheme to identify each voltage measurement is shown on the right of the voltage graph window. Determine which trace corresponds to V (the source signal), V_R (the resistor voltage), and V_{ind} (the inductor voltage). Print a copy of this graph and attach it to this unit. Check that the phase relationships agree with the phasor diagram in the second figure above, i.e. V_{ind} leads V, V_R lags V.

V_{ind} leads V?

V_R lags V?

(e) Measure the amplitude of each of the signals and record these quantities in your data table. This can be done using the SmartTool (see Appendix B), or read directly from the graph.

Activity 3: Analyzing the Circuit

(a) Calculate the remaining quantities necessary to complete your data table. Show the calculations in the space below.

(b) Determine and record the value of L for your inductor. Make careful note of the particular inductor and AC/DC Electronics Laboratory which you have used. You may need to identify it and use it again in another laboratory exercise.

(c) Construct to scale a phasor diagram like the one shown in the second figure in the space below, based on your data.

(d) From the three sinusoidal voltage signals found in 2(d) above, determine the phase difference between the resistor voltage and the output voltage, convert to degrees and compare with your calculated value of ϕ. You may want to expand the time axis on the graph to do this more accurately. Also, determine the phase difference between the resistor voltage and the inductor voltage, convert to degrees and compare with the corresponding angle in your phasor diagram above. Present the results here.

Activity 4: Determining L from Half-life Measurement

(a) Delete the sinusoidal graphs from Activity 2.

(b) Go to the 'Signal Generator' window and change the wave form to 'Positive Square Wave' and the frequency to 30 Hz.

(c) Take data by clicking the *Start* button. The computer will display a square wave for the output voltage, and rising and falling exponential curves for the voltages across the resistor and inductor, characteristic of an LR circuit energized by a constant emf.

(d) Measure the half-life from one of the exponential curves.

(e) Determine the time constant τ from $\tau =$ half-life/ln2.

(f) Determine the inductance L from $\tau = L/R$.

Does the result agree with what you found in Activity 3? What is the percent difference?

37 The LRC Circuit

Name _____ Section _____ Date _____

Objective

To investigate the relationships among the voltages in a series LRC circuit.

Apparatus

- DataStudio 750 Interface
- AC/DC Electronics Laboratory
- Resistor (10Ω)
- Inductor and iron core
- Capacitor ($100\mu F$)
- Voltage sensors (3)
- LRC Circuit activity
- Wires to complete the circuit

Introduction

In this exercise you will investigate a series LRC circuit through measurements of the voltage across the generator, the resistor, the capacitor, and the inductor in the circuit. The computer will be used as a storage oscilloscope to make these measurements and to illustrate the phase relationships among the voltages across the circuit elements.

Consider the series LRC circuit shown in the figure below with a generator of voltage amplitude V, a resistor R, a capacitor C, and an inductor having inductance L and resistance r. Note that the capacitor is assumed to have no resistance. Also shown in the figure is the phasor diagram for the voltages V, V_R, V_C, V_L, and V_r. From the phasor diagram, we can write the following expressions:

$$V = \sqrt{(V_L - V_C)^2 + (V_R + V_r)^2}$$

$$\tan\phi = \frac{V_L - V_C}{V_R + V_r}$$

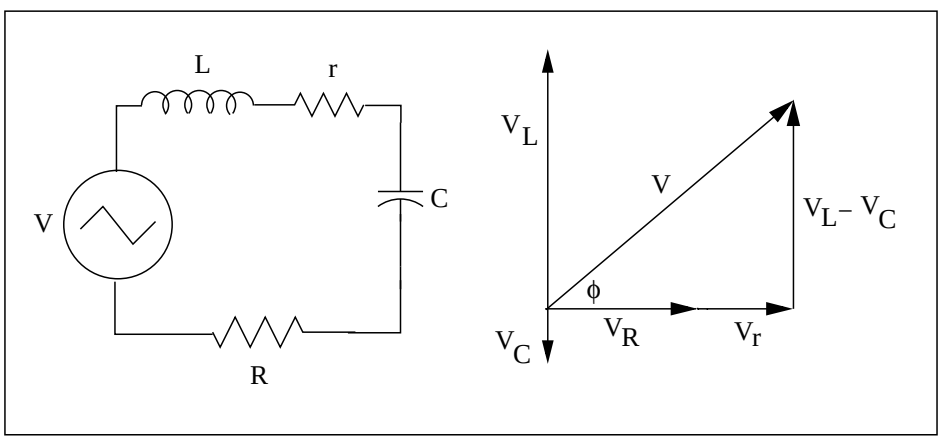

It is not possible to measure either V_L or V_r directly. The only voltage associated with the inductor that can be measured experimentally is the voltage across the inductor V_{ind} which is the vector sum of V_L and V_r.

$$V_{ind}^2 = V_L^2 + V_r^2$$

The voltages V_L and V_r can be expressed in terms of the current I as

$$V_L = I\omega L$$

$$V_r = Ir$$

If the above expressions for V_{ind}^2, V_L, and V_r are combined, and the current I is eliminated it can be shown that

$$V_L = V_{ind}\frac{\omega L}{\sqrt{(\omega L)^2 + r^2}}$$

$$V_r = V_{ind}\frac{r}{\sqrt{(\omega L)^2 + r^2}}$$

Assuming that ω, L, and r are known, V_L and V_r can be determined from the two expressions above if V_{ind} is measured. These values of V_L and V_r combined with measured values of V_C and V_R can be used in the expression for V to verify the relationship between these quantities and the measured generator voltage V.

Activity 1: Voltage in the LRC Circuit

In this laboratory you will be using a voltage source that varies sinusoidally in time. What will the voltage from this source look like as a function of time? In the space below sketch your answer. What is the phase relationship between the source voltage and the voltage drop across an inductor? Sketch that relationship on the same graph below. Label your curve V_{ind}. What is the phase relationship between the source voltage and the voltage drop across a capacitor? Again, sketch your answer on the graph below and label it V_C. Finally, what is the phase relationship between the voltage drop across a resistor in the LRC circuit and the source voltage? Sketch it below and label it V_R.

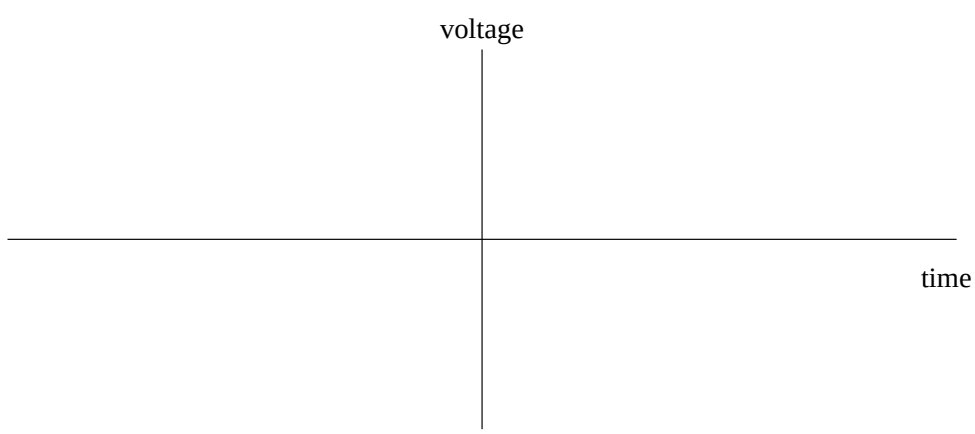

Activity 2: Analysis of the LRC Circuit

(a) Construct a data table with 2 columns and 10 rows. In the first column, label the rows C (μF), V (V), V_R (V), V_{ind} (V), V_C (V), V_L (V), V_r (V), ϕ (deg), $\sqrt{(V_L - V_C)^2 + (V_R + V_r)^2}$ (V), and % Diff.

(b) Open the *LRC Circuit* activity in the 132 Workshop folder in the Programs menu. Go to the 'Signal Generator' window and set the frequency to 30 Hz, the amplitude to 3.0 V, and the wave form to 'Sine Wave'. If you can't find the 'Signal Generator' window, click the 'setup' button at the top of the DataStudio menu. You will see an image of the Pasco 750 interface with several connections marked. Single click on the one called 'Output'. The 'Signal Generator' window should pop up. Set the values on it and return to the original voltage graph window.

(c) Set up the circuit on the AC/DC Electronics Laboratory so that it corresponds to the one shown in the first figure above. The iron core (a long metal cylinder) should be inserted in the inductor. The inductor is the large open, cylinder in the upper-right-hand part of of the AC/DC Electronics Laboratory. The computer and the circuit are set up to measure the voltage across each of the circuit elements. The resistor in the circuit has a value $R = 10\Omega$. Check this value with the DMM and record it as R on your data sheet. In the last lab you determined the inductance L and resistance r of your inductor. Record these values in the space below. Use the value for r measured with the DMM in the previous experiment. Record the value of the capacitor (100 μF) in your data table.

(d) Take data! The computer will display four sinusoidal voltage signals. The color scheme to identify each voltage measurement is shown on the right of the voltage graph window. Determine which trace corresponds to

V (the source signal), V_R (the resistor voltage), V_C (the capacitor voltage), and V_{ind} (the inductor voltage). Examine the phase relationships among the signals. Do these relationships agree with the phasor diagram in the above figure? Explain. Do they agree with the predictions you made in Activity 1? Explain any differences.

(e) Measure the amplitude of each of the signals and record these quantities in your data table. This can be done using the SmartTool graph accessory (see Appendix B), or read directly from the graph.

(f) Calculate the remaining quantities necessary to complete the data table. The % Diff should be determined between the measured value for the generator voltage V and $\sqrt{(V_L - V_C)^2 + (V_R + V_r)^2}$. Show the calculations in the space below. Do your results confirm the phasor diagram shown in the figure above as a correct model for the addition of voltages in an LRC circuit? Explain.

(g) Construct to scale a phasor diagram like the one shown in the figure above, based on your data. Choose some scale (for example 1.00 V/cm) so that the diagram is as large as possible, but still fitting in the space below. Are the phase relationships consistent with what was observed on the computer screen? Is the phase angle ϕ consistent with the calculated value?

Activity 3: Resonance in the LRC Circuit

(a) Construct a data table with the column headings f (Hz), V_R (V), and I_R (A) in the space below.

(b) Set the frequency of the generator to 30 Hz and record this frequency in your data table. Take data for a few seconds and stop. You may have to adjust the horizontal scale to see at least two complete cycles of the signals. Use the button on the horizontal axis. Measure V_R and record it in your data table. (Note: If the peaks of the curves appear to be cut off, reduce the input amplitude and repeat the measurements.)

(c) Repeat step (b) for frequencies of 50, 70, 80, 90, 100, 110, 130, 150, 170, 200, 250, 300, and 350 Hz. The horizontal scale should be adjusted so that at least two cycles of the signals can be viewed. Examine the change in the phase relationship between the signals as the frequency is changed.

(d) Record V_R for each frequency in the second data table. What is resonating in the circuit? Calculate I_R for each entry in your table. Construct a graph of I_R (y axis) versus frequency and insert it into your notebook. Calculate the resonant frequency that you would expect from the values of L and C in the circuit. Does the calculated value for the resonant frequency agree with the graph? Explain.

(e) Set the frequency of the generator to the resonant frequency and use the LRC Circuit activity to display the four voltage signals. Describe and explain the phase relationships among the signals at resonance. Compare them with the predictions you made earlier.

38 Refraction of Light

Name _____ Section _____ Date _____

Objective

To investigate the path traveled by light through a plate of plexiglass (a transparent solid material).

Introduction

The speed of light depends on the medium in which it travels. In passing from one medium, at least some light energy is reflected. If the second medium is transparent, most of the light will pass into and through it. If the beam is not perpendicular to the boundary between the two media, it will bend as it enters, an effect known as refraction. The direction a single ray of light travels when refracted is given by Snell's law:

$$\frac{sin\ i}{sin\ r} = \frac{v_1}{v_2} = \frac{n_2}{n_1}$$

where

i = incident angle

r = refracted angle

v_1 = light speed in medium 1

v_2 = light speed in medium 2

n_1 = index of refraction of medium 1

n_2 = index of refraction of medium 2

Note: All angles are measured from the normal to the boundary at the point the ray enters the medium. The index of refraction is the ratio of light's speed in a vacuum, c, to its speed in the medium, v: $n = c/v$. It is worth remembering that $n_{air} \approx 1.00$.

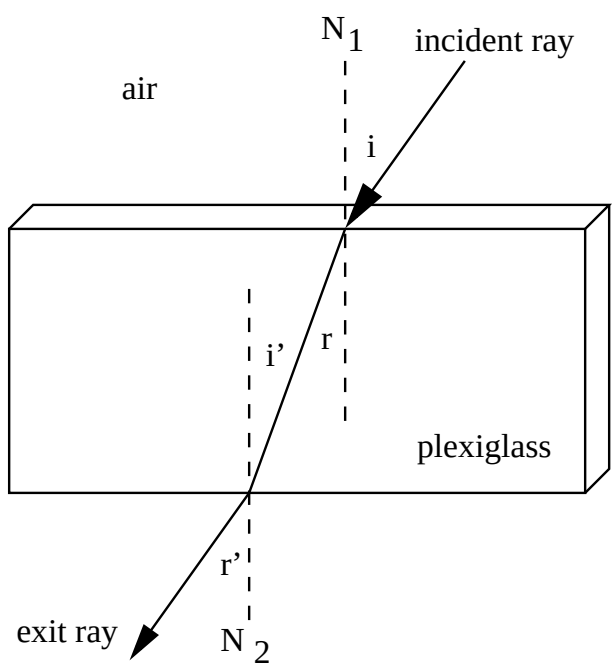

Apparatus

- light fence
- plexiglass block
- white paper, pins, and wood board
- protractor

Activity

1. Put a plexiglass plate at the center of a piece of paper. Outline its position. Identify a normal, N_1, perpendicular to an edge of the plate.
2. Arrange the light source apparatus so that the parallel rays of light cross the paper and are incident at a 30°-35° angle to the normal. Trace one of these rays.
3. Sight the corresponding ray as it emerges from the other side of the plexiglass. Trace this ray.
4. Construct the normal, N_2.
5. Measure and record i, r, i', and r'. Compute and record $n_{plexiglass}$.
6. Repeat the above procedure for different incident angles between 25° and 40°.
7. Calculate and record an average $n_{plexiglass}$.
8. Does $i = i'$? Explain.
9. Does $r = r'$? Explain.
10. Are the incident and exit rays parallel? Explain.
11. What is the speed of light in the plexiglass?

12. Under what conditions would a refraction angle be greater than an incident angle?

39 Refraction at Spherical Surfaces: Thin Lenses

Name _____ Section _____ Date _____

Objective

- To investigate thin lenses.

Introduction

A lens converges or diverges light rays. It is a transparent material bounded, in the case of thin lenses, by spherical edges. The line between the centers of curvature of these edges is referred to as the principal axis. The principal focus is the point on the principal axis where parallel incident rays converge. The distance from the lens to this point is known as the focal length. The relation between the focal distance, f, the object distance, p, and the image distance, q, is:

$$\frac{1}{p} + \frac{1}{q} = \frac{1}{f}.$$

Apparatus

- light fence
- converging (convex) lens in holder
- converging and diverging lenses (1 each) without holders
- optical bench
- light source
- white paper

Investigation 1: The Converging Lens

Activity 1

- Arrange the light source apparatus so that the parallel rays of light cross a piece of paper.
- Place a convex lens (without holder) on the paper perpendicular to the central ray. Outline its position and the path of the rays. Pay particular attention to the condition near the principal focus.
- What is the focal length of this lens?

- Include a sketch of the light rays in your lab book, showing the focal point and focal length of the lens.

Activity 2

- Place the light source in its bracket at one end of the optical bench. The arrow on the light source will be the object in this investigation. Measure and record its height, h_0.

- Place a converging lens in its holder on the optical bench 70 cm from the object (this is the object distance p). Turn on the light source and position a piece of white paper so that a sharp image of the arrow appears on the paper. Measure the distance of the paper from the lens. This is the image distance q. Also measure the height of the image h_i. Record p, q, and h_i in the first line of the following table.

p	q	h_i	$\frac{h_i}{h_0}$	$\frac{q}{p}$	f

- Move the lens to create four more object distances of 60, 50, 40, and 30 cm. In each case, measure the image distance and the height of the image and record in the above table. Calculate and record the ratios of the image and object heights, h_i/h_0, and the image and object distances, q/p. Record these values in the above table. You should now have the first five columns of the above table filled in.
- Calculate and record the focal length, f, for each observation. Show one of the calculations here:
- Determine an average focal length, f_{ave}.
- What is the relationship between the ratio of the image to object heights and the ratio of image and object distances? The first ratio is called the magnification.
- Replace the converging lens with a diverging one. Try to obtain a real image on a piece of white paper.
- Why can you not form a real image with a diverging lens?

Investigation 2: Lenses in Combination (Optional)

Activity

- Place a converging lens and a diverging lens together into the lens holder. Check to see that you can get a real image with this combination.

p	q	h_i	$\frac{h_i}{h_0}$	$\frac{q}{p}$	f

- Repeat the five sets of observations of Investigation 1, Activity 2, to get an equivalent focal length f_{ave}^{eq}.

Investigation 3: The Diverging Lens

Activity 1 (Optional)

- Using the relation:

$$\frac{1}{f^{eq}} = \frac{1}{f_1} + \frac{1}{f_2},$$

determine the focal length of the diverging lens, f_2. Use f_{ave}^{eq} for f^{eq} and f_{ave} for f_1.

Activity 2

- Repeat the procedure of Investigation 1, Activity 1, with a concave lens. Locate the principal focus by extending the refracted rays backwards.
- What is the focal length of this lens?

- Include a sketch of the light rays in your lab book, showing the focal point and focal length of the lens.

40 The Diffraction Grating

Name _____ Section _____ Date _____

Objective

- To determine the wavelength of laser light using a diffraction grating.

Introduction

Light bends (a bit) around corners. This phenomenon is called diffraction. Interference, or the overlap of waves, is the basis for diffraction. In a transmission grating, lines, about 4,000 to 8,000 per centimeter, are ruled onto glass. The unruled portions of the glass act as slits. The interference, and thus diffraction, which results from shining a beam of light through the grating permit the measurement of the wavelength of the light. The relevant relationship, known as the grating equation is:

$$n\lambda = d \sin\theta$$

where n is the order of the spectrum (the number of bright spots from the center), λ is the wavelength in nanometers (10^{-9} meters), d is the separation in nanometers between grating lines, and θ is the angle of deviation from the light beam's original direction through the grating (the angle of diffraction).

Activity

1. Record the separation between grating lines: $d =$
2. Turn on the laser, being careful to avoid looking directly into the beam or shining it at anyone. Aim the light beam through the diffraction grating so that a horizontal series of dots appears on the wall. Adjust the positions of the laser and grating until you easily see at least two dots on either side of the brightest (central) dot.
3. Are the dots of the interference/diffraction pattern the same intensity? Describe the pattern you observe.
4. Measure and record the distance from the grating to the wall, L, as well as the distances from the central dot to the first dot to the right, x, and the first dot to the left, x'. Compute the average of these x values and record it as x_{ave}.
5. Compute and record a value for θ by using the appropriate trigonometric relation between L and x_{ave}. Then, compute $\sin\theta$. Finally, compute the wavelength using equation above.
6. Repeat the procedure for three additional values of L.
7. Compute the average of your four determinations of the laser light's wavelength and compare it to the expected value of 632.8 nm. What is the percentage difference?

L (cm)	x (cm)	x' (cm)	x_{ave} (cm)	θ (rad)	$\sin\theta$	λ (nm)

41 The Interference of Light

Name _____ Section _____ Date _____

Objective

- To investigate the interference of light waves as they pass through a set of slits.

Apparatus

- Laser.
- Phototransistor for measuring light intensity (mounted on rotary motion sensor).
- Set of narrow slits.
- *DataStudio* 750 Interface.
- Plumb line.

Introduction

In this laboratory you will investigate the interference of light produced by a laser beam passing through a set of narrow, adjacent slits. When light passes the slits each opening acts as an independent source of waves that can overlap one another to produce a distinctive pattern of bright and dark spots on a screen. The position of the bright spots depends on the separation of the adjacent slits and the wavelength of the incident light.

You can measure this interference pattern with the setup shown below. A phototransistor is seated behind the narrow opening on top of the large, metal mount sitting on a rail. The phototransistor can translate the intensity of the light falling on it into a voltage signal that can be read by the computer. In addition, the phototransistor can be moved back and forth on a rotary motion sensor that measures the position of the mount. These two signals can be combined to make a graph of the intensity as a function of position.

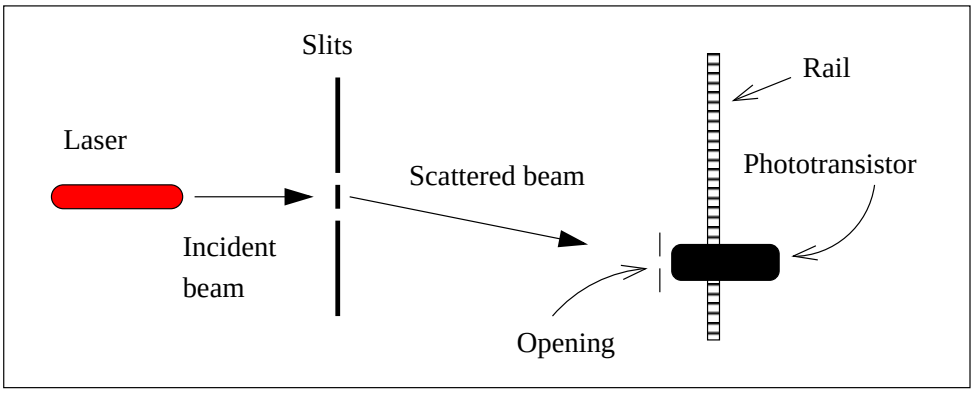

In this unit you will pass light from the laser through slits of known separation and use the interference pattern to determine the wavelength of the light.

Activity 1: An Alternative View

Isaac Newton believed that light was made up of small, unseen particles that obeyed (surprisingly enough!) Newton's Laws. This view is known as the corpuscular theory. We want to consider how this model of light predicts different behavior from the wave theory.

(a) Consider a laser beam shining on a circular hole. If a beam of light consisted of small, unseen particles that behaved as tiny billiard balls what would you see on a screen that is downstream from the circular hole? A sketch might be useful here.

(b) Now consider the same laser beam shining on a pair of narrow slits. What would you see on a screen downstream from the slits if light were made of corpuscles?

For the questions above you should have predicted that the laser would form a single bright spot (for part a) or two parallel lines (for part b). The experiment you are about to perform provided compelling evidence that Newton's corpuscular theory was wrong.

Activity 2: The Interference of Light

(a) You are now ready to turn on the laser. DO NOT LOOK DIRECTLY INTO THE BEAM OR POINT THE LASER CARELESSLY ABOUT THE ROOM. Turn on the laser and you should see the bright red spot of the beam striking the wall. You should have a glass plate with a green border and several different slit arrangements on it. Place the opening in the center of the plate in the path of the laser beam. The adjacent slits in the center hole are 0.03295 mm apart. What do you see?

(b) Position the glass plate about 30-40 cm from the phototransistor mount with the central maximum (the brightest spot) striking the center hole. Measure and record this distance. You may find it useful to use the plumb line to measure this distance. The phototransistor sits about 25.4 mm behind the opening.

(c) Position the phototransistor mount so the interference pattern is at the same height as the opening in the center of the phototransistor mount. The phototransistor is mounted behind this hole. To make accurate measurements it is important to carefully determine the geometry of your setup. Check to see if the slits and the phototransistor mount are perpendicular to the incident laser beam. You want to make sure the phototransistor can "see" as many bright spots as possible. Carefully slide the phototransistor mount back and forth to make sure the it stays centered on the interference pattern. Start the "Interference" activity in the **132 Workshop** folder. When you are ready, click **Start** and slowly move the phototransistor from one side of the slide to the other by turning the wheel on the rotary motion sensor. Move carefully and take about 4-5 seconds to complete the motion. Click **Stop**. When data acquisition is complete you will see a graph representing the intensity reading versus the position reading. You should see several distinct peaks. This graph is the interference pattern. If you do not see this pattern consult your instructor. Make a hardcopy of this graph and attach it to this unit.

(d) Is the spacing between the intensity peaks constant? Is the intensity of each peak the same? Does it appear that any peaks are missing? The more peaks you see the more (and hopefully better) data you can collect. There is a button on top of the phototransistor labeled "Gain" which changes the size of the intensity signal. Trying changing this setting to see if you can get more peaks in your spectrum.

(e) When you are satisfied with the quality of your spectrum record the position of each peak in the table below. Use the **Smart Tool** to accurately read off the peak positions by clicking on the appropriate button along the top of the graph. A set of cross-hairs will appear on the plot. Grab the cross-hairs by clicking on them and dragging them to the point you want to measure. The coordinates will be printed by the cross-hairs. Turn off the laser when you are finished.

Position Reading (m)	Change in Reading (m)

Activity 3: Determining the Wavelength of the Laser

(a) For the data you recorded in the previous activity calculate the difference between each pair of adjacent readings and record it in your data table.

(b) Calculate the average and standard deviation of the separation between adjacent peaks.

(c) The position of the interference maxima can be described by

$$y_m = \frac{\lambda L}{d} m$$

where y_m is the distance of a bright spot from the central maximum (the distance along the slide in this experiment) and L is the distance from the slits to the phototransistor. The quantity d is the slit separation, λ is the wavelength of the light, and m is the order of the bright spot. Generate an expression for the distance between adjacent bright spots.

(d) Use the expression you calculated above and the average separation between bright spots to calculate the wavelength of the laser light. Compare your result with the expected value of 6328 angstroms. Are the peaks of the interference pattern the same intensity? Describe the pattern you observe.

(e) Collect the results for the wavelength from the other teams in class and calculate the average and standard deviation. Record the results here. Are you results consistent with the class results? Why or why not?

(f) Recall the earlier discussion of Newton's corpuscular theory of light. Does your data support Newton's theory or the wave theory? Why?

42 Diffraction of Light

Name _____ Section _____ Date _____

Objective

To investigate how the interference and diffraction of light waves combine to form a distinctive pattern and how that pattern can be used to measure the size of an object.

Introduction

In this laboratory you will investigate the interference and diffraction of light produced by a laser beam passing through a set of narrow, adjacent slits. When light passes through a set of slits, each opening acts as an independent source of waves that can overlap one another to produce a distinctive pattern of bright and dark spots on a screen. The position of the bright spots depends on the separation of the adjacent slits and the wavelength of the incident light. In addition, diffraction produced by the individual slits modifies the intensity of each spot. To perform the following activities you will need:

- Laser.
- Phototransistor for measuring light intensity (mounted on rotary motion sensor).
- Set of narrow slits.
- *DataStudio* 750 Interface.
- Plumb line.

You can measure this interference/diffraction pattern with the setup shown below. A phototransistor is seated behind the narrow opening on top of the metal mount. The phototransistor can translate the intensity of the light falling on it into a voltage signal that can be read by the computer. In addition, the phototransistor can be moved back and forth on a rotary motion sensor that measures the position of the mount. These two signals can be combined to make a graph of the intensity as a function of position.

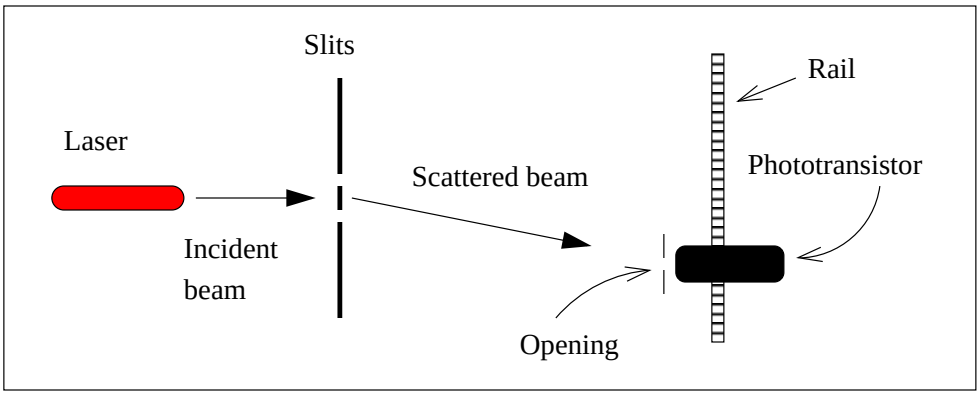

Fig. 1. View of diffraction apparatus from above.

In this unit you will pass light of known wavelength through slits and use the diffraction pattern to determine the size of the individual slit through which the light passed.

Intensity of Interference

For light that passes through two very narrow slits one can calculate a theoretical expression for the interference pattern that would be produced in such a situation. The expression is

$$I_{int} = 4I_0 cos^2(\frac{\pi d}{\lambda}\sin\theta)$$

where I_{int} is the intensity of the light at the phototransistor, I_0 is the maximum intensity of the incident light, d is the slit separation, θ is the angular position of the scattered light relative to the incident beam, and λ is the wavelength of the light. This expression has a characteristic shape shown below. We will compare this prediction of "pure" interference (without diffraction effects) with the measured pattern in the next activity.

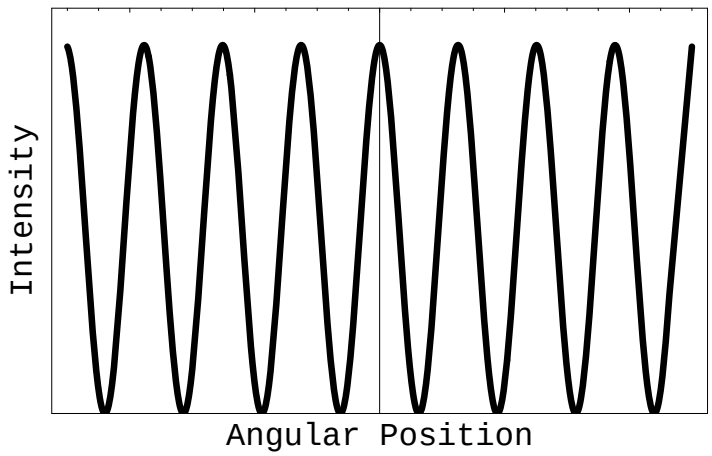

Fig. 2. Intensity distribution of pure interference.

Activity 1: The Interference of Light

(a) You are now ready to turn on the laser. DO NOT LOOK DIRECTLY INTO THE BEAM OR POINT THE LASER CARELESSLY ABOUT THE ROOM. Turn on the laser and you should see the bright red spot of the beam striking the wall. You should have a glass plate with a green border and several different slit arrangements on it. Place the opening in the center of the plate in the path of the laser beam. The adjacent slits in the center hole are 0.03295 mm apart.What do you see?

(b) Position the glass plate about 30-40 cm from the phototransistor apparatus with the beam striking the center opening. Place the apparatus so the intensity pattern is at the same height as the opening in the center of the device mounted on a movable slide. The phototransistor is mounted behind this opening. To make accurate measurements it is important to carefully determine the geometry of your setup. Check to see if the slits and the phototransistor mount are perpendicular to the incident laser beam. You also want the phototransistor to "see" as many bright spots as possible. Gently slide the mount back and forth to make sure the phototransistor stays centered on the interference pattern. You need to know the perpendicular distance from the center hole to the position of the phototransistor. Place the phototransistor mount at the position of the central maximum (the brightest spot) and measure the distance from the center hole of the slits to the front face of the phototransistor mount. You may find it useful to use the plumb line to measure this distance. Record your result. The phototransistor itself sits 25.4 mm behind the opening on the front face of the phototransistor mount.

(c) Start the "Interference" activity in the **132 Workshop** folder. When you are ready, click **Start** and slowly move the phototransistor from one side of the slide to the other by turning the wheel on the rotary motion

sensor. Move carefully and take about 4-5 seconds to complete the motion. When data acquisition is complete, click **Stop** and you will see a graph representing the intensity reading versus the position reading. You should see several distinct peaks. This graph is the interference pattern. If you do not see this pattern, consult your instructor. Make a hardcopy of this graph and attach it to this unit.

(d) Is the spacing between the intensity peaks constant? Is the intensity of each peak the same? Does it appear that any peaks are missing? How does the measured intensity spectrum compare with the one predicted for "pure" interference discussed above? What is different? What is the same?

(e) Measure and record the Position Reading and Intensity Reading of each peak in the table below. Use the **Smart Tool** to accurately read off the peak positions by clicking on the appropriate button along the top of the graph. A set of cross-hairs will appear on the plot. Grab the cross-hairs by clicking on them and dragging them to the point you want to measure. The coordinates will be printed by the cross-hairs. Turn off the laser when you are finished.

Position Reading (m)	Intensity Reading (%)

Activity 2: Intensity of Diffraction

Applying the same theoretical techniques that were applied to interference (see equation above) one can derive a prediction for the intensity pattern due to diffraction of light passing through a single slit. The result is

$$I_{diff} = I_m(\frac{\sin(\frac{\pi a}{\lambda}\sin\theta)}{\frac{\pi a}{\lambda}\sin\theta})^2$$

where a is the size of the single slit, θ is the angular position of the phototransistor relative to the incident beam, I_m is the maximum intensity at the center of the diffraction pattern, and λ is the wavelength of the light. The shape of this intensity distribution is shown in Figure 3.

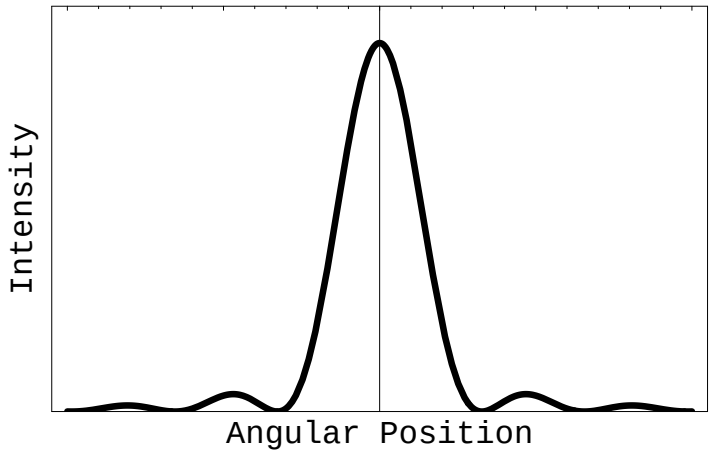

Fig. 3. Intensity distribution of diffraction from a single slit.

(a) The figure above shows the diffraction pattern has a central maximum with a series of points where the intensity goes to zero at positive and negative angles. When is the expression for the intensity in the equation above equal to zero?

(b) Using the result of part (a), what is the angular position of the minima on either side of the central maximum?

(c) Finally, generate an expression for the angular width of the central maximum in terms of a, λ, and any other constants you need.

Combining Interference and Diffraction

By now you should have realized that your measured intensity distribution does not completely agree with the distribution predicted by "pure" interference as represented by the first equation and Figure 2. When light passes through a pair of slits diffraction occurs at each individual slit and casts the characteristic pattern described by the second equation. At the same time there is interference between the light from different slits that creates an interference pattern described by the first equation. The net effect is a multiplication of these two equations to yield

$$I_{total} = I_m \cos^2(\frac{\pi d}{\lambda}\sin\theta)(\frac{\sin(\frac{\pi a}{\lambda}\sin\theta)}{\frac{\pi a}{\lambda}\sin\theta})^2$$

where I_m is the intensity of the central maximum, θ is the position of the phototransistor, d is the separation of

the slits, a is the size of an individual slit, and λ is the wavelength of the light. The shape of this distribution is shown by the solid curve in Figure 4.

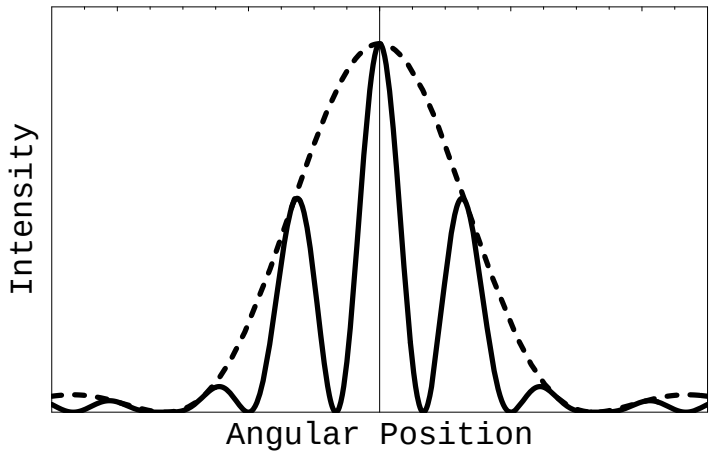

Fig. 4. Intensity distribution of light passing through a pair of slits.

The intensity of the interference peaks is no longer constant, but is modulated by the diffraction envelope represented by the dashed curve. This dashed curve is a plot of the second equation normalized to the maximum intensity at zero degrees. The intensity of each peak in the distribution represents the intensity due to the diffraction effects. If more slits are added, then the widths of the individual peaks in Figure 4 become narrower, but their intensity remains the same. In the next Activity you will use your data to determine the diffraction pattern and the angular width of the central diffraction envelope. This width can be used to measure the size of the individual slits that produced the distribution.

Activity 3: Measuring the Size of the Slit with the Diffraction Pattern

(a) Does the intensity distribution you measured with the phototransistor resemble the pattern shown in Figure 4? If not, consult your instructor.

(b) In Activity 1 you recorded the position and intensity of the interference peaks you measured with the phototransistor. How would you calculate the angular position of each peak relative to the central maximum? A sketch might be helpful here.

(c) Use your expression to calculate the angular position of each interference peak that you recorded and enter your results in the table below. Plot intensity versus angular position. Does your plot resemble the shape of the diffraction pattern shown in Figure 3? If not, consult your instructor. Print the plot and attach it to this unit.

Angular Position (radians)	Intensity Reading (V)

(d) What is the angular width of the central maximum in your data? Use the expression from part 2(c) to calculate the size of the slit. The expected result is 0.015 mm. What is your percent difference? Use the wavelength for the laser light that you found in the unit on interference of light.

(e) Collect the results for the slit width from the other teams in class and calculate the average and standard deviation. Record the result here. Are your results consistent with the class results? Why or why not?

(f) Can you think of any other methods for measuring small separations like this accurately?

43 The Optical Spectrum of Hydrogen

Name _____ Section _____ Date _____

Objective

- To determine the wavelengths of the visible lines in the hydrogen spectrum using a spectrometer and a diffraction grating.
- To determine the value of Rydberg's constant.
- To compare the predicted energy levels with the measured ones.

Introduction

The spectral lines of the hydrogen spectrum that fall in the visible region are designated as the H_α, H_β, H_γ, and H_δ lines. All (there happen to be four of them) belong to the Balmer series. In general, the spectrum of hydrogen can be represented by Rydberg's formula:

$$\frac{1}{\lambda} = R_H \left(\frac{1}{n_f^2} - \frac{1}{n_i^2} \right) \tag{1}$$

where n_f can be any positive integer and n_i takes on the values of $n_f + 1$, $n_f + 2$, $nf + 3$, and so on and R_H is the Rydberg constant for hydrogen and equals $1.097 \times 10^7 m^{-1}$.

If one writes equation 1 twice–once, say for the H_α wavelength λ_α, and once for the H_β wavelength, λ_β, then one can eliminate R_H:

$$\frac{1}{n_\beta^2} = \frac{1}{n_f^2} - \left(\frac{\lambda_\alpha}{\lambda_\beta} \right) \left(\frac{1}{n_f^2} - \frac{1}{n_\alpha^2} \right) \tag{2}$$

Thus, once one finds λ_α and λ_β so through trial and error one can determine the value of the three n's in equation 2 (recall they all must be integers and $(n_f < n_\alpha < n_\beta)$.

Activity 1: Measuring Spectral Lines

Use the spectrometer to measure the angle (once on each side) for each line and get an average angle for each line. Calculate the wavelength of each line using the relation:

$$\lambda = d \sin \theta \tag{3}$$

where d is the diffraction grating spacing.

Diffraction grating spacing d = Å

Line	θ_{left} (degrees, minutes)	θ_{right} (degrees, minutes)	$\theta_{average}$ (decimal degrees)	Wavelength (Å)	n	Color
H_α						red
H_β						blue-green
H_γ						blue

Activity 2: Calculating the Rydberg Constant

Using pairs of measured wavelengths and guesses for n_f and one of the n_i's, calculate the other n_i in equation 2. When this calculated number is close to an integer you may have the correct value for the other n's. Once you have determined the proper n's, calculate a value of R_H for each line and compare the average of these with the accepted value. Use your results to predict the wavelength of the next line in the series λ_δ. It's measured value is 4101.2Å. How does your prediction compare?

R_α =

R_β =

R_γ =

$R_{average}$ = % difference =

λ_δ = % difference =

Collect values of $R_{average}$ from the other groups in the class and calculate an average and standard deviation. Record it below. How does this result compare with the accepted value? How does it compare with your individual measurement? Be quantitative in your answer.

Activity 3: The Hydrogen Level Diagram

The energy levels of hydrogen can be described with the equation

$$E_n = -\frac{13.6\ eV}{n^2} \tag{4}$$

where n is called the principle quantum number. The relationship between the wavelength of the emitted light and its energy is $E = hc/\lambda$ where c is the speed of light and h is Planck's constant. Make an energy level diagram showing the transitions you believe you have measured. Calculate the transition energies (from $E = hc/\lambda$) based on your measured wavelengths; also calculate the values of these transition energies predicted by equation 4. How do your measured transition energies compare with the predicted ones?

44 A Theory for the Hydrogen Atom

Name _____ Section _____ Date _____

Objective

To use a numerical technique to solve the Schroedinger equation for the hydrogen atom, compare calculations with spectroscopic measurements from hydrogen, and explore the implications of the quantum theory especially the quantization of energy in bound systems.

Apparatus

- *Schrödinger Shooter* software
- Results from previous measurements of hydrogen energy transitions.

Overview

Quantum mechanics is the theoretical structure used to make sense of the atomic and sub-atomic world. It is based on a small set of assumptions and a lot of associated mathematics.

The Postulates of Quantum Mechanics

1. The quantum state of a particle is characterized by a wave function $\Psi(\vec{r}, t)$, which contains all the information about the system an observer can possibly obtain. The square of the magnitude of the wave function $|\Psi(\vec{r}, t)|^2$ is interpreted as a probability or probability density for the particle's presence.
2. The things we measure (*e.g.* energy, momentum) are called observables. Each observable has a corresponding mathematical object called an operator that does 'something' to the wave function $\Psi(\vec{r}, t)$. The radial dependence of the wave function $\Psi(\vec{r}, t)$ is governed by the energy operator which generates a famous expression called the Schrödinger equation.

$$-\frac{\hbar^2}{2m}\left(\frac{d^2}{dr^2} + \frac{L^2}{2mr^2}\right)\Psi(r) + V\Psi(r) = E\Psi(r) \tag{1}$$

   Ultimately, the success of this approach will depend on how the theoretical results we generate from solving the Schrödinger equation compare with our measurements.

We will focus on these postulates in this laboratory and in particular on understanding and solving Equation 1, the Schrödinger equation.

Activity 1: Energy in Three Dimensions

Consider a particular form of the total mechanical energy of a particle in three dimensions

$$E = \frac{1}{2}m\vec{v}\cdot\vec{v} + V(\vec{r}) = \frac{1}{2}m(v_x^2 + v_y^2 + v_z^2) + V(\vec{r}) = \frac{1}{2}mv^2 + V(\vec{r}) \tag{2}$$

where m is the particle's mass, $\vec{v}$ is its velocity, and $V(\vec{r})$ is the potential energy of the particle and depends only on the particle's position. We have used the definition of the momentum $\vec{p} = m\vec{v}$. The potential energy between the electron and proton in a hydrogen atom is the Coulomb potential so

$$V(\vec{r}) = k_e\frac{q_1 q_2}{r} = -k_e\frac{e^2}{r} \tag{3}$$

where we have used the known proton and electron charges.

If we have an electron in the vicinity of a proton (*i.e.* a hydrogen atom), then it is convenient to rewrite the kinetic energy part of Equation 2 in polar coordinates. The proton, electron and the electron's velocity vector form a plane where we can describe the velocity in terms of a radial component and an angular one

$$\vec{v} = v_r\hat{r} + v_t\hat{\theta} \tag{4}$$

where $\hat{r}$ points radially along a line from the origin to the electron's position and $\hat{\theta}$ is perpendicular to $\hat{r}$ and points so counter-clockwise rotations are positive.

(a) Get an expression for v^2 in terms of v_r and v_t and substitute your result in the energy equation (Equation 2).

(b) We can now define the momentum associated with the radial motion as $\vec{p}_r = m\vec{v}_r$ and the momentum associated with the angular motion $L = mrv_t$. The angular momentum L is a constant of the motion so it is unchanging. Rewrite your energy equation in terms of p_r, L, r, and any other constants. Include the explicit version of the potential in Equation 3.

(c) You should have found in part 1.b that the three-dimensional energy of a particle in a Coulomb field can be written as

$$E = \frac{p_r^2}{2m} + \frac{L^2}{2mr^2} - k_e \frac{e^2}{r} \tag{5}$$

where L is a constant so the energy only depends on r and p_r. Note the similarities with the forms of the Schrödinger equation in Equation 1. Make a sketch of the potential energy as a function of r. What are the limiting values of the potential?

(d) The angular momentum L is a constant of the motion so the last two terms in Equation 5 can be treated as a single 'effective' potential that governs the radial motion of particles. Make a sketch of those last two terms as a function of r for constant L. How is your figure different from the one in 1.c?

(e) Since the energy is constant you can draw it on your previous sketch as a flat, straight line. We are considering bound states (the hydrogen atom) so $E < 0$. Draw an energy line for a bound state on your previous sketch. Does your energy 'curve' intersect the effective potential curve anywhere? For a classical particle like a ball rolling on a hill or a satellite orbiting the Earth, what happens at this intersection? Describe the motion of a classical particle in this potential. What restrictions are there on the energy E of a classical particle?

Activity 2: Quantum Predictions

(a) What do you expect the wave function of the electron in a hydrogen atom to look like? Copy your drawing from part 1.d and add a sketch of your expectation for the hydrogen atom wave function on the same graph. Consider what happens as the effective potential changes with r.

(b) What happens to your wave function as the energy increases? Make another copy here of the graph of the effective potential energy that you made in 2.a. Draw an energy curve for a higher energy state than your previous one. Now sketch the new, higher-energy wave function. How is it different from the curve you made in 2.a?

Activity 3: Solving the Schrödinger Equation

(a) We are now ready to start solving the Schrödinger Equation. Go first to the `All Programs` menu, then to `Physics Applications` and click on `Schrödinger Shooter`. You will see the `Schrödinger Shooter` window like the one in the next figure. If you don't see this window, consult your instructor.

(b) The first step is to select a potential energy function. Click on `File` and go to `New Potential Energy Function`. Select the potential energy function most appropriate for the hydrogen atom. Next select the charge of the atomic nucleus by entering that value in the box labeled `Z:` in units of the electronic charge e. Set the quantum number of the angular momentum to zero in the box labeled `L:`. Use the second menu button from the left-hand side at the bottom of the `Schrödinger Shooter` window to choose `Normalized` wave functions (it should be labeled `Not Normalized` when you start the program). This last choice makes it easier to compare wave functions for different quantum numbers. Last, set the initial value of the energy to -1.5 in the box labeled `Energy (Rydbergs):` and hit return. The conversion between eV and rydbergs is 13.6056923(12) eV/rydberg. The number in parentheses is the uncertainty on the last two digits in the experimental value. At this point

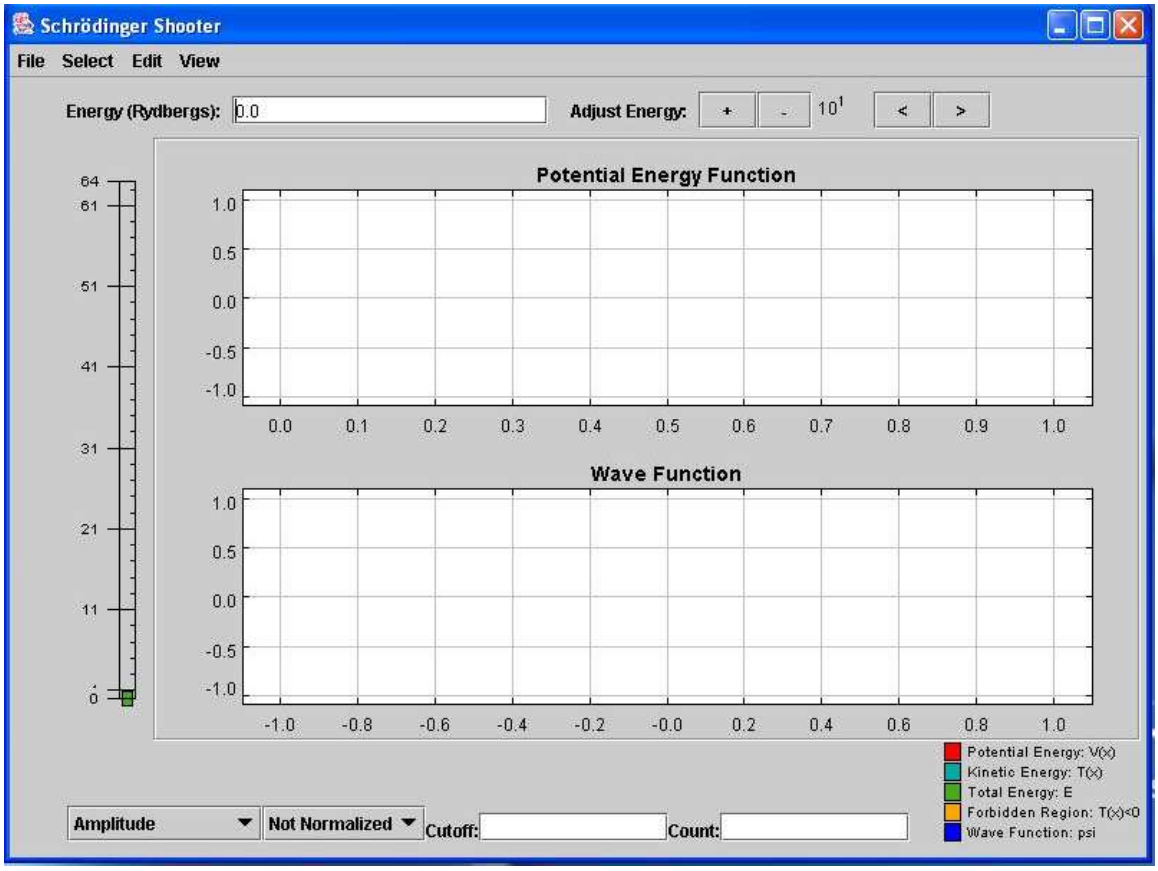

Figure 1: Initial panel for *Schrödinger Shooter*

you should see curves in both of the panels of the `Schrödinger Shooter` window. If you don't, consult your instructor.

(c) You should see several curves in the upper panel. What quantities do the blue, red, yellow, and green curves represent? Use the legend in the lower right portion of the `Schrödinger Shooter` window. Record them here.

(d) You can now adjust the energy of the electron in the field of the proton to find the energy levels of hydrogen. There are three ways to change this energy. There is a slide on the left-hand side of the `Schrödinger Shooter` window. Click and drag the slide to change the energy and read the value in the box labeled `Energy(Rydbergs)` located near the top of the `Schrödinger Shooter` window. You can also enter the energy in the same box labeled `Energy(Rydbergs):` as you did in part 3.b. Last, to the right of this last box there are buttons labeled `Adjust Energy:` that will increase or decrease the energy and change the step size.

(e) Tune the energy to find lowest five energy levels in your hydrogen atom by obtaining physically acceptable wave functions. You may need to increase the horizontal range to view the full wave function. You can do this by increasing the value in the box labeled `Cutoff:` at the bottom of the `Schrödinger Shooter` window. If you increase the horizontal scale, then increase the next box labeled `Count:` (next to the `Cutoff` box) by the same ratio. In other words, if you double the cutoff, then double the count. This last parameter controls the stepsize used in the numerical integration of the Schrödinger equation. What does the wave function look like when you

have found the correct energy level? What postulate did you exploit to find the correct solutions? How does the radial wave function change as the energy increases? Record you values for each of the energy levels below.

Activity 4: Analysis and Comparison with Previous Data

(a) Enter the values you found for the energies in an *Excel* spreadsheet and convert the values to eV. Use the scale below to make an energy level diagram for hydrogen.

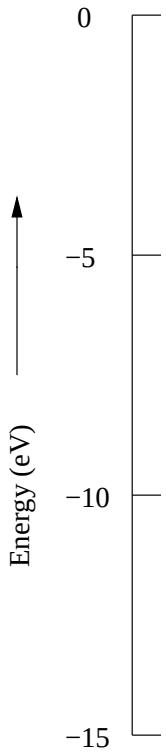

(b) In the lab entitled *Optical Spectrum of Hydrogen* you measured and identified transitions in hydrogen between different principle quantum levels. Using the results in part 4.a calculate the energies of the same transitions and the wavelength of the emitted photon. Record your results below.

(c) Compare your measured results from the *Optical Spectrum of Hydrogen* with the predictions of your model in part 4.b. Calculate the percentage difference for each transition. Does your model agree with the data? Be quantitative in your answer.

Activity 5: The Meaning of Quantum Theory

(a) For one of your hydrogen energy states, change the angular momentum of the quantum state by setting $L = 1$ in the box labeled `L:`. How does the radial wave function change? How much does the energy change? Do the same thing with the next higher energy state. Can you jump to any conclusions about the effect of angular momentum on the energy of a quantum state in hydrogen?

(b) Return to the questions in Activity 2 and examine your predictions. How did you do? Correct any statements that you now find are wrong.

(c) What requirement or postulate forces us to choose particular energy states (*i.e.* what causes energy quantization)?

(d) Reconsider a variation of one of the questions in part 1.e. In that question you were asked to describe the motion of a classical particle like a satellite orbiting the Earth. Describe the motion of a quantum particle in the hydrogen atom potential.

Homework

1. An atom (not a hydrogen atom) absorbs a photon whose frequency is $f = 6.2 \times 10^{14}\ Hz$. How much does the energy of the atom increase?

2. What is the energy of the hydrogen atom electron whose probability density is represented by the dot plot shown below? What minimum energy is needed to remove this electron from the atom?

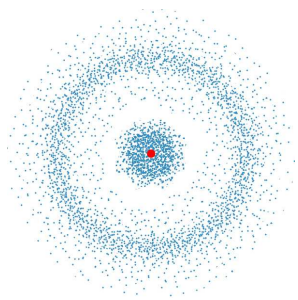

3. What are the energy and wavelength of a photon emitted when a hydrogen atom undergoes a transition from the $n = 3$ state to the $n = 1$ state?

4. What is the wavelength of the least energetic photon emitted in the Lyman series (where $n_f = 1$) of the hydrogen atom spectrum lines?

5. What is the series limit for the Lyman series (where $n_f = 1$)?

45 Galilean Relativity

Name _____ Section _____ Date _____

Objective

To investigate the relationship between different inertial reference frames and develop the equations of Galilean relativity.

Overview

Before we begin our study of Einstein's special theory of relativity we will first investigate the effects of observing a phenomenon in two different inertial frames of reference. A spring-launched projectile will be "fired" from a moving platform and we will discover how the description of this phenomenon changes(or doesn't change) in a frame that moves along with the platform. You will use the video analysis software and mathematical modeling tools to find the equations that describe the horizontal motion (x vs. t) and the vertical motion (y vs. t) of the projectile in a stationary frame and then in an inertial frame moving at constant speed with the launcher. The set of relationships between the inertial reference frames forms Galilean relativity. These relationships provide an intuitive, "common sense" picture of the world that works well at low velocities, but fails in many surprising ways at high velocities. At high velocities we must resort to Einstein's special theory of relativity that we will discuss later. To do the activities in this unit you will need:

- A video analysis system (*VideoPoint*).
- The film Moving Launcher.
- Graphing and curve fitting software.

Activity 1: Observing Projectile Motion From a Moving Launcher

(a) Use the *VideoPoint* package to analyze the film *Moving Launcher* and determine the position of the projectile in each frame with a fixed origin. To do this task follow the instructions of **Appendix D: Video Analysis** for calibrating the film and analyzing the data. When you are analyzing the movie, place the fixed origin in the first frame of the movie at the dark spot on the cart the launcher rides. This makes the comparison with the activities below easier. Change the origin by performing the following steps.

1. Click on the arrow icon near the top of the menu bar to the left. The cursor will be shaped like an arrow when you place it on the movie frame.
2. Click at the origin (where the axes cross) and drag the origin to the desired location.
3. Click on the circle at the top of the menu bar to the left to return to the standard cursor for marking points on the film.

(b) Collect the data for analysis by following the instructions in **Appendix D**. The data table should contain three columns with the values of time, x-position, and y-position. Print the data table and attach it to this unit.

(c) Determine the position of the launcher at the first and last frames of the movie. Using these results, what is the horizontal and vertical speed of the launcher during the movie?

x_0= x_1= Δt= $v_{xlauncher}$ =

y_0= y_1= $v_{ylauncher}$ =

(d) Plot and fit the position versus time data for the horizontal and vertical positions of the projectile. Print each plot and attach it to this unit. Record the equation of each fit here. Be sure to properly label the units of each coefficient.

x(t) =

y(t) =

What is the horizontal speed of the projectile? How did you determine this?

Activity 2: Changing Reference Frames

(a) We now want to consider how the phenomenon we just observed would appear to an observer that was riding along on the launcher at a constant speed. Assume the moving observer places her origin at the same place you put your origin on the first frame of the movie. Predict how each graph will change for the moving observer.

Horizontal position versus time:

Vertical position versus time:

(b) Use the *VideoPoint* package to analyze the film *Moving Launcher* again and determine the position of the projectile in each frame. However, this time you will use a moving origin that is placed at the same point on the cart on each frame. Use the same point on the launcher that you used to define the origin in the first frame during the previous activity. To change the origin from frame to frame follow these instructions.

1. Open the movie as usual and enter one object to record. First you must select the existing origin and change it from a fixed one to a moving one. Click on the arrow near to top of the menu bar to the left. The cursor will have the shape of an arrow when you place it on the movie frame. Click on the existing origin (where the axes cross) and it will be highlighted.
2. Under the **Edit** menu drag down and highlight **Edit Selected Series**. A dialog box will appear. Click on the box labelled **Data Type** and change the selection to **Frame-by-Frame**. Click OK.
3. Click on the circle at the top of the menu bar to the left to change the cursor back to the usual one for marking points. Go to the first frame of interest. When the cursor is placed in the movie frame it will be labelled with "Point S1". Click on the object of interest. The film will NOT advance and the label on the cursor will now be "Origin 1". Click on the desired location of the origin in that frame. The film will advance as usual. Repeat this procedure to accumulate the x- and y-positions relative to the origin you've defined in each frame.

(c) Collect the data for analysis. The data table should contain three columns with the values of time, x-position, and y-position. Print the data table and attach it to this unit.

(d) Plot and fit the position versus time data for the horizontal and vertical positions. When you have found a good fit to the data, record your result below, print the graph, and attach a copy to this unit. Be sure to properly label the units of each coefficient in your equation.

x(t) =

y(t) =

What is the horizontal speed of the projectile? How did you determine this?

Activity 3: Relating Different Reference Frames

(a) Compare the two plots for the vertical position as a function of time. How do they differ in appearance? Are the coefficients of the fit for each set of data different? Do these results agree with your predictions above? If not, record a corrected "prediction" here.

(b) Compare the two plots for the horizontal position as a function of time. How do they differ in appearance? Are the coefficients of the fit for each set of data different? Do these results agree with your predictions above? If not, record a corrected "prediction" here.

(c) What is the difference between the horizontal velocities in the two reference frames? How does this difference compare with the horizontal velocity of the launcher? How are the horizontal velocities of the projectile in each inertial reference frame and the velocity of the launcher that you determined above related to one another? Does this relationship make sense? Why or why not?

(d) Consider a point $\mathbf{r} = x\mathbf{i} + y\mathbf{j}$ on the ball's trajectory in the stationary observer's reference frame. If the moving observer's time frame is moving at the speed $v_{x\ launcher}$ then what would the moving observer measure for x? Call this horizontal position of the moving observer x'.

(e) What would the moving observer measure for y? Call this vertical position of the moving observer y'.

(f) The relationships you found above are from Galilean relativity. You should have obtained the following results.

$$x' = x - v_{xlauncher}t$$
$$y' = y$$
$$v_x = v'_x + v_{xlauncher}$$

The primes refer to measurements made in the moving frame of reference in this case. If you did not get these expressions consult your instructor.

Activity 4: Testing Galilean Relativity

(a) You can test your mathematical relationships with the spreadsheet capabilities of *Excel*. Use your data for the stationary observer and the relationship you derived to calculate what the observer moving with the launcher would measure. As an example of *Excel*'s spreadsheet functions, consider graphing a function like $f(x) = 2x - 1$ where the values of x are entered as data in column 1 in *Excel*. To calculate $f(x)$ and place the result for each value of x in column 2, double click on the box at the top of column 2 that has the lone "2" in it. The cursor will now appear in the box at the top of the Data window. In that window use the following syntax to calculate $f(x) = 2x - 1$

=(2.0*C1)-1

where "C1" refers to the data in column 1 and the "*" implies multiplication. Hit the "Enter" key when you are finished. You should see the proper series of numbers appear in column 2. If you do not, consult your instructor.

(b) Once you know how to make spreadsheet calculations use the data in *Moving Launcher Data* to calculate the horizontal position versus time for the moving observer. Make a plot of the calculated time for the moving observer and fit the result.

For the transformed stationary observer data:

x'(t) =

For the moving observer data (see Activity 3.c):

x(t) =

(c) Your "transformed" data for the stationary observer should closely resemble the results for the moving observer. Is this what you observe? If not, consult your instructor. Print and attach a copy of your plot to this unit.

46 The Twins Paradox

Name _____ Section _____ Date _____

Objective

To investigate some of the unusual implications of Einstein's special theory of relativity.

Overview

Einstein's theory of special relativity leads to a variety of apparent paradoxes that depart radically from our everyday expectations. One of the most celebrated is the twins paradox, in which an identical twin makes a long interstellar journey while the other twin remains on the (roughly) stationary Earth. When the space-faring twin returns she finds her partner has aged considerably more than she has. In this unit you will explore the quantitative aspects of the paradox and some of the surprising consequences.

Activity 1: Setting Things Up

Problems in special relativity are often very counterintuitive, so it is instructive to consider the situation non-relativistically first. Investigate this problem without applying any of the new ideas you have learned about the theory of special relativity.

One member of a pair of identical twins has decided to embark on a long space voyage. The two twins have lived their lives in close proximity to one another and are very similar in appearance. The adventurous twin boards a fast spacecraft and leaves the Earth behind at a speed of 0.99c or 99% of the speed of light. The space-faring twin's itinerary is rather monotonous, and she simply travels at this constant speed for a time, turns around, and returns to the Earth at the same speed. She measures the time of her trip to be Δt_p. In the meantime the Earth-bound twin has seen twenty years pass by. We will refer to this time as Δt.

(a) In mathematical terms, what is the relationship between the times Δt_p and Δt?

(b) Which time is associated with which twin?

(c) When the twins are reunited will their appearances differ?

Activity 2: Applying Special Relativity

(a) Now we want to apply the lessons of special relativity. Time dilation implies that moving clocks run more slowly when observed by someone in a different inertial frame. For the twins paradox what does this imply about the time interval the space-faring twin measures during her trip? Will it be less than, equal to, or greater than the interval measured by the Earth-bound twin? Will the space-faring twin age more, less, or the same amount as the Earth-bound twin?

(b) What is the mathematical relationship between Δt_p and Δt according to the special theory of relativity?

(c) How much time has passed on the Earth-bound twin's clock?

(d) How much time has passed on the space-faring twin's clock?

(e) If this result is inconsistent with your prediction above how should you resolve the contradiction?

(f) How will the two twins' appearances differ, if at all? Is the difference only in the measurement of the time intervals or are there real physiological differences between the twins after the trip?

(g) If the average speed of the space-faring twin was more like the typical orbital speed of the space shuttle (about 7.4 km/s) what would the time difference between the twins' clocks be? Show your calculation.

Activity 3: Graphical Analysis

(a) Find a mathematical relationship for the ratio of the time interval measured by the space-faring twin to the time interval measured by the Earth-bound twin. Show your work and record your result here.

(b) We want to use the plotting capabilities of *Excel* to graph the ratio you derived above as a function of β, the speed of the space-faring twin's spaceship as a fraction of the speed of light. As an example, to graph a function

like f(x) = $\sqrt{x}$ we first have to prepare a list of values of x where we want to calculate f(x). To do this in column 1 of the *Excel* data window click in cell *A1*, the first row and first column of the spreadsheet. In that cell use the following syntax to calculate β in steps of 0.05.

=0.05*row()

where "row()" is a function in *Excel* that enables you to use the row number in the spreadsheet for calculations. Hit the "Enter" key when you are finished. You should see zero in that top cell. Now click on the bottom, right-hand, corner of the cell and drag down as many cells as you need. You should see a series of numbers 0.0, 0.05, 0.10, 0.15, ... appear in column 1. If you do not, consult your instructor. Now we can generate the values of the function in column 2. Follow a procedure similar to the one you just performed. Click on the top cell in column 2 and use the following syntax to calculate $\sqrt{x}$.

=sqrt(A1)

where "A1" refers to the data in column 1 that will be used to calculate f(x). Now you can make a line plot of column 2 versus column 1 in the usual fashion.

(c) Make a plot of the ratio of the time interval measured by the space-faring twin to the time interval measured by the Earth-bound twin. Restrict the range of β to 0-1. At what average speed does the effect of time dilation become significant? Is there a limit to the ratio? Is there any reason to restrict the range of β to 0-1? Clearly state your reasoning. Print your plot and attach a copy to this unit.

(d) Consider the following scenario. As the space-faring twin's craft recedes from the Earth it is moving at a constant speed. Since no inertial frame can be considered "better" than any other there is nothing physically inconsistent with the view that the space-faring twin is observing the Earth recede from her at a constant velocity. Hence, the space-faring twin will observe clocks on the Earth to move slowly and the Earth-bound twin will age at a slower rate than the space-faring one. Is this reasoning flawed? How?

(e) If the scenario is not flawed how can it be that the space-faring twin was found to have aged less in the original problem?

A Treatment of Experimental Data

Recording Data

When performing an experiment, record all required original observations as soon as they are made. By "original observations" is meant what you actually see, not quantities found by calculation. For example, suppose you want to know the stretch of a coiled spring as caused by an added weight. You must read a scale both before and after the weight is added and then subtract one reading from the other to get the desired result. The proper scientific procedure is to record both readings as seen. Errors in calculations can be checked only if the original readings are on record.

All data should be recorded with units. If several measurements are made of the same physical quantity, the data should be recorded in a table with the units reported in the column heading.

Significant Figures

A laboratory worker must learn to determine how many figures in any measurement or calculation are reliable, or "significant" (that is, have physical meaning), and should avoid making long calculations using figures which he/she could not possibly claim to know. *All sure figures plus one estimated figure are considered significant.*

The measured diameter of a circle, for example, might be recorded to four significant figures, the fourth figure being in doubt, since it is an estimated fraction of the smallest division on the measuring apparatus. How this doubtful fourth figure affects the accuracy of the computed area can be seen from the following example.

Assume for example that the diameter of the circle has been measured as $.526\underline{4}$ cm, with the last digit being in doubt as indicated by the line under it. When this number is squared the result will contain eight digits, of which the last five are doubtful. Only one of the five doubtful digits should be retained, yielding a four-digit number as the final result.

In the sample calculation shown below, each doubtful figure has a short line under it. Of course, each figure obtained from the use of a doubtful figure will itself be doubtful. The result of this calculation should be recorded as 0.2771 cm^2, including the doubtful fourth figure. (The zero to the left of the decimal point is often used to emphasize that no significant figures precede the decimal point. This zero is not itself a significant figure.)

$$(.526\underline{4}\text{ cm})^2 = .2770\underline{9696}\text{ cm}^2 = 0.277\underline{1}\text{ cm}^2$$

In multiplication and division, the rule is that a calculated result should contain the same number of significant figures as the least that were used in the calculation.

In addition and subtraction, do not carry a result beyond the first column that contains a doubtful figure.

Statistical Analysis

Any measurement is an intelligent estimation of the true value of the quantity being measured. To arrive at a "best value" we usually make several measurements of the same quantity and then analyze these measurements statistically. The results of such an analysis can be represented in several ways. Those in which we are most interested in this course are the following:

<u>Mean</u> - The mean is the sum of a number of measurements of a quantity divided by the number of such measurements, which is just the arithmetic mean or the so-called average. It generally represents the best estimate of true value of the measured quantity.

<u>Standard Deviation</u> - The standard deviation (σ) is a measure of the range on either side of the mean within which approximately two-thirds of the measured values fall. For example, if the mean is 9.75 m/s^2 and the standard deviation is 0.10 m/s^2, then approximately two-thirds of the measured values lie within the range 9.65 m/s^2 to 9.85 m/s^2. A customary way of expressing an experimentally determined value is: Mean$\pm\sigma$, or (9.75$\pm$ 0.10) m/s^2. Thus, the standard deviation is an indicator of the spread in the individual measurements, and a small σ implies high precision. Also, it means that the probability of any future measurement falling in this range is approximately two to one. The equation for calculating the standard deviation is

$$\sigma = \sqrt{\frac{\Sigma\left(x_i - \langle x \rangle\right)^2}{N-1}}$$

where x_i are the individual measurements, $\langle x \rangle$ is the mean, and N is the total number of measurements.

<u>% Difference</u> - Often one wishes to compare the value of a quantity determined in the laboratory with the best known or "accepted value" of the quantity obtained through repeated determinations by a number of investigators. *The % difference is calculated by subtracting the accepted value from your value, dividing by the accepted value, and multiplying by 100.* If your value is greater than the accepted value, the % difference will be positive. If your value is less than the accepted value, the % difference will be negative. The % difference between two values in a case where neither is an accepted value can be calculated by choosing one as the accepted value.

B Introduction to DataStudio

Quick Reference Guide

Shown below is the quick reference guide for DataStudio.

What You Want To Do	How You Do It	Button
Start recording data	Click the 'Start' button or select 'Start Data' on the Experiment menu (or on the keyboard press CTRL - R (Windows) or Command - R (Mac))	Start
Stop recording (or monitoring) data	Click the 'Stop' button or select 'Stop Data' on the Experiment menu (or on the keyboard press CTRL - . (period) (Win) or Command - . (Mac))	Stop
Start monitoring data	Select 'Monitor Data'on the Experiment menu (or on the keyboard press CTRL - M (Win) or Command - M (Mac))	none

On the Graph Display	In the Graph Toolbar	Button
Re-scale the data so it fills the Graph display window	Click the 'Scale to Fit' button.	
Pinpoint the x- and y-coordinate values on the Graph display	Click the 'Smart Tool' button. The coordinates appear next to the 'Smart Tool'.	
'Zoom In' or 'Zoom Out'	Click the 'Zoom In' or 'Zoom Out' buttons.	
Magnify a selected portion of the plotted data	Click the 'Zoom Select' button and drag across the data section be to magnified.	
Create a Calculation	Click the 'Calculate' button	
Add a text note to the Graph	Click the 'Note' button.	
Select from the Statistics menu	Click the Statistics menu button	
Add or remove a data run	Click the 'Add/Remove Data' menu button	Data
Delete something	Click the 'Delete' button	
Select Graph settings	Click the 'Settings' menu button	

Selecting a Section of Data

1. To select a data section, hold the mouse button down and move the cursor to draw a rectangle around the data of interest. The data in the region of interest will be highlighted.
2. To unselect the data, click anywhere in the graph window.

Fitting a Section of Data

1. Select the section of data to be fitted.

2. Click on the **Fit** button on the Graph Toolbar and select a mathematical model. The results of the fit will be displayed on the graph.

3. To remove the fit, click the **Fit** button and select the checked function type.

Finding the Area Under a Curve

1. Use the **Zoom Select** button on the Graph Toolbar to zoom in around the region of interest in the graph. See the quick reference guide above for instructions.

2. Select the section of data that you want to integrate under.

3. Click the **Statistics** button on the Graph Toolbar and select **Area**. The results of the integration will be displayed on the graph.

4. To undo the integration, click on the **Statistics** button and select **Area**.

C Introduction to Excel

Microsoft Excel is the spreadsheet program we will use for much of our data analysis and graphing. It is a powerful and easy-to-use application for graphing, fitting, and manipulating data. In this appendix, we will briefly describe how to use Excel to do some useful tasks.

C.1 Data and formulae

Figure 2 below shows a sample Excel spreadsheet containing data from a made-up experiment. The experimenter was trying to measure the density of a certain material by taking a set of cubes made of the material and measuring their masses and the lengths of the sides of the cubes. The first two columns contain her measured results. **Note that the top of each column contains both a description of the quantity contained in that column and its units.** You should make sure that all of the columns of your data tables do as well. You should also make sure that the whole spreadsheet has a descriptive title and your names at the top.

In the third column, the experimenter has figured out the volume of each of the cubes, by taking the cube of the length of a side. To avoid repetitious calculations, she had Excel do this automatically. She entered the formula `=B5∧3` into cell C5. Note the equals sign, which indicates to Excel that a formula is coming. The ∧ sign stands for raising to a power. After entering a formula into a cell, you can grab the square in the lower right corner of the cell with the mouse and drag it down the column, or you can just double-click on that square. (Either way, note that thing you're clicking on is the tiny square in the corner; clicking somewhere else in the cell won't work.) This will copy the cell, making the appropriate changes, into the rest of the column. For instance, in this case, cell C6 contains the formula `=B6∧3`, and so forth.

Column D was similarly produced with a formula that divides the mass in column A by the volume in column C.

At the bottom of the spreadsheet we find the mean and standard deviation of the calculated densities (that is, of the numbers in cells D5 through D8). Those are computed using the formulae `=average(D5:D8)` and `=stdev(D5:D8)`.

C.2 Graphs

Here's how to make graphs in Excel. For those who've used earlier version of Excel but not Excel 2007, note that the locations of some of the menu items have changed, although the basic procedure is similar.

First, use the mouse to select the columns of numbers you want to graph. (If the two columns aren't next to each other, select the first one, then hold down the control key while selecting the second one.) Then click on

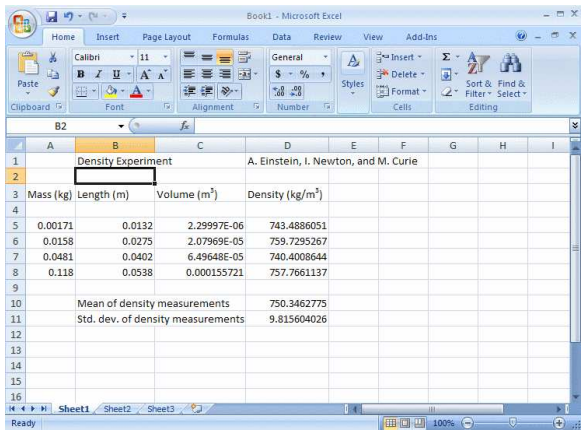

Figure 2: Sample Excel spreadsheet

the `Insert` tab at the top of the window. In the menu that shows up, there is a section called `Charts`. Almost all of the graphs we make will be scatter plots (meaning plots with one point for each row of data), so click on the `Scatter` icon. You'll see several choices for the basic layout of the graph. You usually want the first one, with an icon that looks like this . Click on this icon, and your graph should appear.

Next, you'll need to customize the graph in various ways, such as labeling the axes correctly. Everything you need to do this is in the `Chart Tools` menu, which should be visible in the upper right portion of the window. (If you don't see the words `Chart Tools`, try clicking on your newly-created graph, and it should appear.) The most useful items are under the `Layout` tab, so click on the word `Layout` under the `Chart Tools` menu. Here are some things to do under this menu:

- The most important item here is the `Axis Titles` menu. You can use this to add labels to the x and y axes of your graph, if it doesn't already have them. Edit the text inside of the two axis titles so that it indicates what's on the two axes of your graph *and the appropriate units*.
- It's probably a good idea to give your graph an overall title as well. The options for doing this are under `Chart Title` (not surprisingly).
- If the graph contains only one set of data points, you may wish to remove the legend that appears at the right side of the graph. After all, the information in the legend is probably already contained in the title and axis labels, so the legend just takes up space. Go to the `Legend` menu and click `None` to do this.
- Sometimes, you want your graph to contain a best-fit line passing through your data points. To do this, go to the `Trendline` menu. The easiest thing to do is to click on `More trendline options` at the bottom, which will bring up a dialog box with a bunch of choices. Excel can fit various kinds of curves through data points, but we almost always want a straight line, so you'll probably choose the `Linear` option. If you want to see the equation that describes this line, check the `Display Equation on chart` option near the bottom. Remember that Excel won't include the correct units on the numbers in this equation, but you should. Also, Excel will always call the two variables x and y, even though they might be something else entirely. Bear these points in mind when transcribing the equation into your lab notebook.

Sometimes, you may want to make a graph in Excel where the x column is to the right of the y column in your worksheet. In these cases, Excel will make the graph with the x and y axes reversed. There are at least two ways to fix this problem. Here's the simpler way: before you make your graph, make a copy of the y column in the worksheet and paste it so that it's to the right of the x column. Then follow the above procedure and everything will be fine. If you don't want to do that, here's another way. Click `Select data` (near the left-hand side under the Chart Tools menu). In the box that pops up, highlight `Series1` and click `Edit`. You should see a box that contains entries for `Series X values` and `Series Y values`. You want to swap the entries in those two windows. (But really, it's much easier to do it the first way.)

C.3 Making Histograms

A histogram is a useful graphing tool when you want to analyze groups of data, based on the frequency at given intervals. In other words, you graph groups of numbers according to how often they appear. You start by choosing a set of 'bins', *i.e.*, creating a table of numbers that mark the edges of the intervals. You then go through your data, sorting the numbers into each bin or interval, and tabulating the number of data points that fall into each bin (this is the frequency). At the end, you have a visualization of the distribution of your data.

Start by entering your raw data in a column like the one shown in the left-hand panel of Figure 3. Look over your numbers to see what is the range of the data. If you have lots of values to sift through you might consider sorting your data is ascending or descending order. To do this task, choose the column containing your data by clicking on the letter at the top of the column, go to `Data` in the menubar, select `Sort`, and pick ascending or descending. The data will be rearranged in the order you've chosen and it will be easier to see the range of the data. For an example, see the middle column of data in the left-hand panel of Figure 3. Now to create your bins

pick a new column on your spreadsheet and enter the values of the bin edges. Make sure the bins you choose cover the range of the data. See the left-hand panel of Figure 3 again for an example.

You now have the ingredients for making the histogram. Go to `Data` in the menubar, select `Data Analysis`, and choose `Histogram`. You should see a dialog box like the one in the right-hand panel of Figure 3. Click in the box labeled `Input Range` and then highlight the column on the spreadsheet containing your data. Next, click in the box labeled `Bin Range` and highlight the column on the spreadsheet containing the bins. Under `Output Options`, select `New Worksheet Ply` and give the worksheet a name. Click `OK` in the `Histogram` dialog box. You should now see a new worksheet with columns labeled `Bin` and `Frequency` and a new tab at the bottom with the name you put in the `New Worksheet Ply` entry. See the left-hand panel in Figure 4. Your original data are still available on another worksheet (probably labeled `Sheet1`). Now highlight the `Bins` and `Frequency` columns by clicking and dragging across the column headings (the `A` and `B` at the top of the columns in the left-hand panel of Fig. 4). You can then make a graph by following the procedure in Appendix C.2 above. The only difference is that this time you will choose to make a `Column` graph instead of a `Scatter` graph. Make sure you properly label the axes including the units for each quantity. Results should look like the right-hand panel of Figure 4.

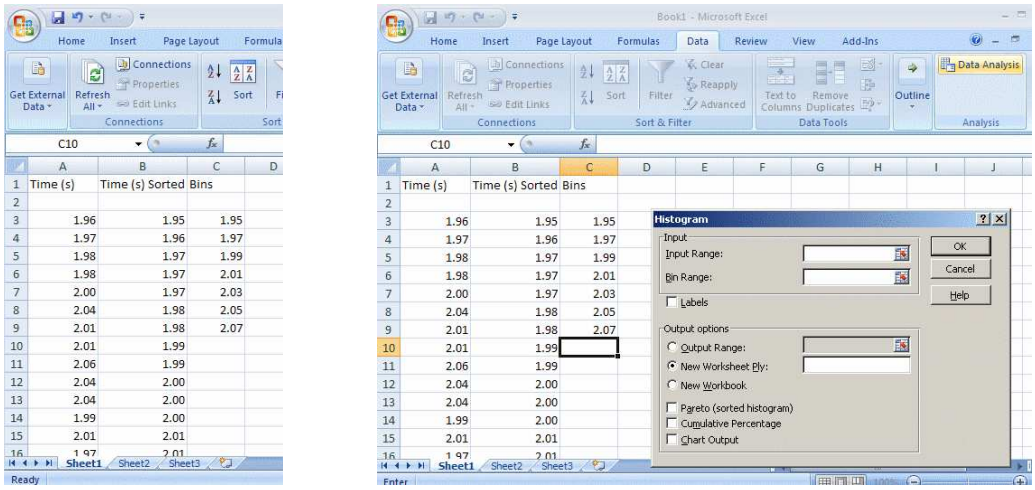

Figure 3: Column data and bins (left-hand panel) and dialog box (right-hand panel) for making a histogram in Excel.

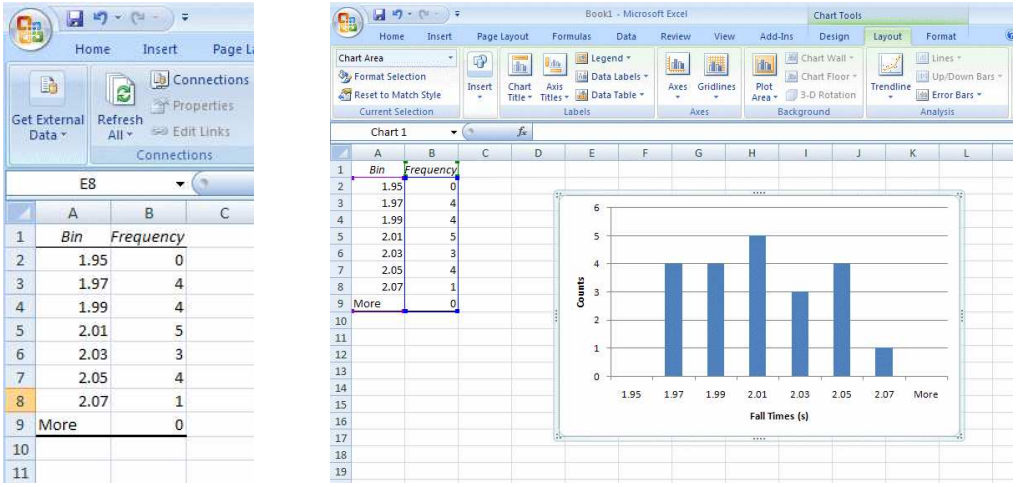

Figure 4: Newly-created worksheet (left-hand panel) and final plot (right-hand panel) for histogram worksheet in Excel.

D Video Analysis

Making a Movie

To make a movie, perform the following steps:

1. Start up *Videopoint Capture* by going to *Start* → *Programs* → *Physics Applications* → *VideoPoint* → *VP Capture*.
2. The program will first ask you to choose a file name and location for the video you are going to make. You should choose to put the file on the **Desktop**.
3. Click on the *Capture rate* box and set the capture rate to 30 frames per second.
4. Go to the *Size & Colors* under the *Capture Options* menu, and choose the largest available size for the video.
5. Be sure the camera is at least 1 meter from the object you will be viewing. This constraint is required to reduce the effect of perspective for objects viewed near the edge of the field of view. Set up the camera so that its field of view is centered on the expected region where you will perform the experiment.
6. Focus the camera by rotating the barrel on the outside of the lens until you have a clear picture.
7. Place a ruler or some object of known size in the field of view where it won't interfere with the experiment. The ruler should be the same distance away from the camera as the motion you are analyzing so the horizontal and vertical scales will be accurately determined. It should also be parallel to one of the sides of the movie frame.
8. One member of your group should perform the computer tasks while the others do the experiment.
9. To start recording your video, click *Record.* When you're done, click *Stop.*
10. The next step is to decide how much of the movie to save. Use the slider to step through the movie frame by frame. When you find the first frame you want to save, click *First.* When you find the last frame you want to save, click *Last.* (You may want to save the entire movie, in which case *First* and *Last* really will be the first and last frames. Often, though, there will be "dead" time either at the beginning or the end of the movie, which you might as well cut out before saving.)
11. After you've selected the range of frames you want to save, the button at the lower right should say *Keep.* Make sure that the box next to this button says *All.* (If it says *Double*, change it to *All.*) Then click *Keep* and *Save.* You will be asked to provide a file name. Pick something unique that you can easily identify. You will then see a quick replay of the movie as Videopoint converts and saves it.

Analyzing the Movie

To determine the position of an object at different times during the motion, perform the following steps:

1. Start up *VideoPoint* by going to *Start* → *Programs* → *Physics Applications* → *VideoPoint* → *VideoPoint 2.5.* Click *Open Movie.* You will see a dialogue box. Set the *Files of type:* box to *All Files(*.*)* and select the file you created before. The file should have an extension like '.mov' or '.movvv'. Click *Open.*
2. *VideoPoint* will request the number of objects you want to track in the movie. Carefully read the instructions for the unit you are working on to find this number. Enter it in the space provided. You will now see several windows. (Note: You may have to move the movie window out of the way to see the other windows.) One contains the movie and has control buttons and a slider along the bottom of the frame to control the motion of the film. Experiment with these controls to learn their function. Another window below the movie frame (labeled Table) contains position and time data and a third window to the right of the frame (labeled Coordinate Systems) describes the coordinate system in use.

3. This is a good time to calibrate the scale. Go to a frame where an object of known size is clearly visible (see item 6 in the previous section). Under the **Movie** menu highlight **Scale Movie**. A dialog box will appear. Enter the length of the object and set **Scale Type** to **Fixed**. Click **Continue**. Move the cursor over the frame and click on the ends of scaling object.

4. You are now ready to record the position and time data. Go to the first frame of interest. Move the cursor over the frame and it will change into a small circle with an attached label. Place the circle over the object of interest in the frame and click. The x and y positions will be stored and the film advanced one frame. Move the circle over the position of the object in the frame and repeat. Continue this process until you have mapped out the motion of the object. If you entered more than one object to keep track of when you opened the movie, then you will click on all those objects in each frame before the film advances.

5. When you have entered all the points you want, go to the **File** menu and select **Export data**. This will allow you to save your data table as an Excel file. Save this file on the desktop (by clicking on the "Open" button, which actually doesn't open anything), and double-click on the saved file to start up Excel. You will now be able to continue your data analysis in Excel.

6. Once you have looked at your data in Excel and made sure everything looks OK, you can quit Videopoint Analysis. If you are sure you have exported your data correctly to Excel, there is no need to save in Videopoint.

Changing the Origin

To change the position of the origin take the following steps.

1. Click on the arrow icon near the top of the menu bar to the left. The cursor will be shaped like an arrow when you place it on the movie frame.

2. Click at the origin (where the axes cross) and drag the origin to the desired location.

3. Click on the circle at the top of the menu bar to the left to return to the standard cursor for marking points on the film.

Using a Moving Coordinate System

To record the position of an object and to change the coordinate system from frame to frame take the following steps.

1. Open the movie as usual and enter one object to record. First we have to select the existing origin and change it from a fixed one to a moving one. Click on the arrow near the top of the menu bar to the left. The cursor will have the shape of an arrow when you place it on the movie frame. Click on the existing origin (where the axes cross) and it will be highlighted.

2. Under the **Edit** menu drag down and highlight **Edit Selected Series**. A dialog box will appear. Click on the box labeled **Data Type** and highlight the selection **Frame-by-Frame**. Click OK.

3. Click on the circle at the top of the menu bar to the left to change the cursor back to the usual one for marking points. Go to the first frame of interest. When the cursor is placed in the movie frame it will be labeled with "Point S1." Click on the object of interest. The film will NOT advance and the label on the cursor will change to "Origin 1." Click on the desired location of the origin in that frame. The film will advance as usual. Repeat the procedure to accumulate the x- and y-positions relative to the origin you've defined in each frame.

E Instrumentation

Introduction

Being both quantitative and experimental, physics is basically a science of measurement. A great deal of effort has been expended over the centuries improving the accuracy with which the fundamental quantities of length, mass, time, and charge can be measured.

It is important that the appropriate instrument be used when measuring. Ordinarily, a rough comparison with a numerical scale, taken at a glance and given in round numbers, is adequate. Increasing precision, though, requires a more accurate scale read to a fraction of its smallest division. The "least count" of an instrument is the smallest division that is marked on the scale. This is the smallest quantity that can be read directly without estimating fractions of a division.

Even at the limit of an instrument's precision, however, accidental errors— which cannot be eliminated—still occur. These errors result in a distribution of results when a series of seemingly identical measurements are made. The best value, known as the most probable value, is the arithmetic mean or average of the measurements.

Other errors, characteristic of all instruments, are known as systematic errors. These can be minimized by improving the equipment and by taking precautions when using it.

Length Measurement

Three instruments will be available in this class for length measurements: a ruler (one- or two-meter sticks, for example), the vernier caliper, and the micrometer caliper.

The Meter Stick

A meter stick, by definition, is 1 meter (m) long. Its scaled is divided, and numbered, into 100 centimeters (cm). Each centimeter, in turn, is divided into 10 millimeters. Thus 1 cm = 10^{-2} m, and 1 mm = 10^{-1} cm = 10^{-3} m.

When measuring a length with a meter stick, different regions along the scale should be used for the series of measurements resulting in an average value. This way, non-uniformities resulting from the meter stick manufacturing process will tend to cancel out and so reduce systematic errors. The ends of the stick, too, should be avoided, because these may be worn down and not give a true reading. Another error which arises in the reading of the scale is introduced by the positioning of the eyes, an effect known as parallax. Uncertainty due to this effect can be reduced by arranging the scale on the stick as close to the object being measured as possible.

The Vernier Caliper

A vernier is a small auxiliary scale that slides along the main scale. It allows more accurate estimates of fractional parts of the smallest division on the main scale.

On a vernier caliper, the main scale, divided into centimeters and millimeters, is engraved on the fixed part of the instrument. The vernier scale, engraved on the movable jaw, has ten divisions that cover the same spatial interval as nine divisions on the main scale: each vernier division is $\frac{9}{10}$ the length of a main scale division. In the case of a vernier caliper, the vernier division length is 0.9 mm. [See figures below.]

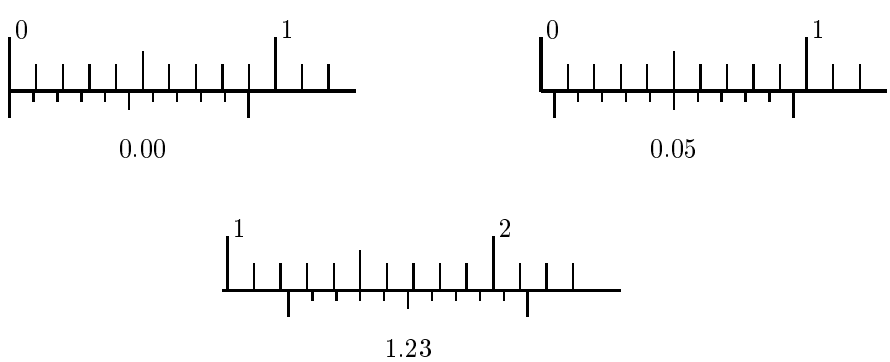

Examples of vernier caliper readings

To measure length with a vernier caliper, close the jaws on the object and read the main scale at the position indicated by the zero-line of the vernier. The fractional part of a main-scale division is obtained from the first vernier division to coincide with a main scale line. [See examples above.]

If the zero-lines of the main and vernier scales do not coincide when the jaws are closed, all measurements will be systematically shifted. The magnitude of this shift, called the zero reading or zero correction, should be noted and recorded, so that length measurements made with the vernier caliper can be corrected, thereby removing the systematic error.

The Micrometer Caliper

A micrometer caliper is an instrument that allows direct readings to one hundredth of a millimeter and estimations to one thousandth of a millimeter or one millionth of a meter (and, hence, its name). It is essentially a carefully machined screw housed in a strong frame. To measure objects, place them between the end of the screw and the projecting end of the frame (the anvil). The screw is advanced or retracting by rotating a thimble on which is engraved a circular scale. The thimble thus moves along the barrel of the frame which contains the screw and on which is engraved a longitudinal scale divided in millimeters. The pitch of the screw is 0.5 mm, so that a complete revolution of the thimble moves the screw 0.5 mm. The scale on the thimble has 50 divisions, so that a turn of one division is $\frac{1}{50}$ of 0.5 mm, or 0.01 mm.

Advance the screw until the object is gripped gently. Do not force the screw. A micrometer caliper is a delicate instrument.

To read a micrometer caliper, note the position of the edge of the thimble along the longitudinal scale and the position of the axial line on the circular scale. The first scale gives the measurement to the nearest whole division; the second scale gives the fractional part. It takes two revolutions to advance one full millimeter, so note carefully whether you are on the first or second half of a millimeter. The result is the sum of the two scales. (See examples below).

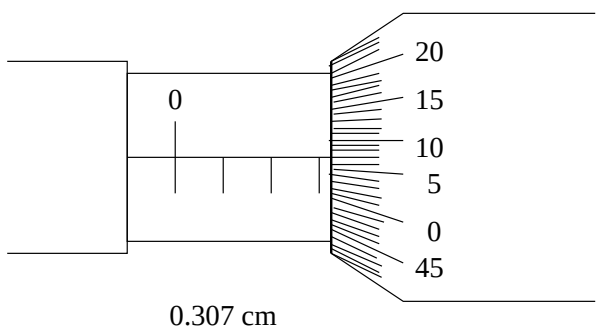

0.307 cm

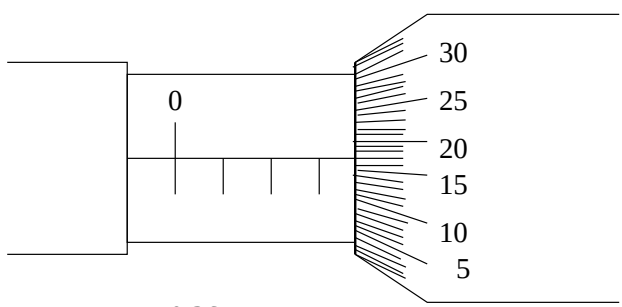

0.367 cm

As with the vernier caliper, the zero reading may not be exactly zero. A zero error should be checked for and recorded, and measurements should be appropriately corrected.

Mass Measurement

Three kinds of instruments will be available to determine mass: a digital scale and two types of balances. The operation of the first instrument is trivial, and so will not be explained here.

Please understand that with each of these instruments we are really comparing weights, not masses, but the proportionality of weight and mass allows the instruments to be calibrated for mass.

The Equal-Arm Balance

The equal-arm balance has two trays on opposite sides of a pivot. The total mass placed on one tray required to balance the object on the other gives the mass of the object. Most equal-arm balances have a slider, as well, that can move along a scale and allow for greater precision than the smallest calibrated mass available. Typically, this scale has 0.5 g divisions.

The Triple-Beam Balance

The triple-beam balance, so-called because of its three slider scales, can be read to 0.1 g and estimated to half that. With an object on the tray, the masses of the different scales are slid to notches until balanced. Get close with the larger masses first and then fine-adjust with the smallest slider.

Time Measurement

Time measurements in this course will be made either with a computer or with a stop watch. This first is out of your control.

The Stop Watch

The stop watches you will use in class have a time range of from hours to hundredths of a second. There are two buttons at the top: a stop/start button and a reset button. The operation of these should be evident, although once the watch is reset, the reset button also starts the watch (but doesn't stop it). Please be aware of this feature.

Charge Measurements

The magnitude of charge is among the most difficult measurements to make. Instead a number of indirect measurements are undertaken to understand electric phenomena. These measurements are most often carried out with a digital multimeter

The Digital Multimeter

The digital multimeters available for laboratory exercises have pushbutton control to select five ac and dc voltage ranges, five ac and dc current ranges, and six resistance ranges. The ranges of accuracy are 100 microvolts to 1200 volts ac and dc, 100 nanoamperes to 1.999 amperes ac and dc, and 100 milliohms to 19.99 megaohms.

To perform a DC voltage measurement, select the DCV function and choose a range maximum from one of 200 millivolts or 2, 20, 200, or 1200 volts. Be sure the input connections used are V-Ω and COMMON. The same is true for AC voltage, regarding range and inputs, but the ACV function button should be selected.

For DC current choose DC MA (for DC milliamperes), while for AC current choose AC MA. Your choices for largest current are 200 microamperes or 2, 20, 200, or 2000 milliamperes. Check that the input are connected to MA and COMMON.

There are two choices for resistance measurement: Kilohms (KΩ) and Megohms (20MΩ). The input connectors are the same as when measuring voltage, namely V-Ω and COMMON. The range switches do not function with the Megohm function, but one of the range buttons must be set. The maximum settings for Kilohm readings are 200Ω or 2, 20, 200, or 2000kΩ.

F Nuclear Safety

All of the radioactive sources we will use in class are very low-level isotopes referred to as "license-free" sources. The following guidelines should be followed for handling radioactive materials in the classroom.

1. Eating, drinking, and application of cosmetics in the laboratory are not permitted.
2. Pipetting by mouth is never permitted. Use suction devices such as pipette filters.
3. Gloves and lab coats should be worn when working with all liquid isotopes.
4. Before leaving the lab, wash your hands thoroughly and check for possible contamination with a survey instrument.
5. All radioactive liquid wastes are to be poured into the liquid waste container, NEVER into a sink.
6. Report all spills, wounds, or other emergencies to your instructor.
7. Maintain good housekeeping at all times in the lab.
8. Store radioactive material only in the designated storage area. Do not remove sources from the lab.